VACON® NXN
COMMON DC BUS

NON-REGENERATIVE FRONT END UNIT (NFE)

USER MANUAL

VACON®
DRIVEN BY DRIVES

AT LEAST THE 11 FOLLOWING STEPS OF THE *START-UP QUICK GUIDE* MUST BE PERFORMED DURING THE INSTALLATION AND COMMISSIONING.

IF ANY PROBLEMS OCCUR, PLEASE CONTACT YOUR LOCAL DISTRIBUTOR.

Start-up Quick Guide

1. Check that the delivery corresponds to your order, see Chapter 3
2. Before taking any commissioning actions, read carefully the safety instructions in Chapter 1.2
3. Before the mechanical installation, check the minimum clearances around the unit and check the ambient conditions in Chapter 5
4. Check the size of the supply cable/bus bar, DC output cable/bus bar, and mains fuses, DC fuses and check the cable connections.
5. Follow the installation instructions, see Chapter 5.
6. The sizes and earthing of control connections are explained in Chapter 5.
7. All parameters have factory default values. No any changes need to make for proper operation.
8. The Vacon NX Non-Regenerative Front End is now ready for use.

Vacon Plc is not responsible for the use of the Non-Regenerative Front End against the instructions.

CONTENTS

VACON NXN USER'S MANUAL

INDEX

1 SAFETY
2 EU DIRECTIVE
3 RECEIPT OF DELIVERY
4 Non-REGENERATIVE FRONT END UNIT (NFE)
5 INSTALLATION
6 CONTROL KEYPAD
7 APPENDICES

ABOUT THE VACON NXN USER'S MANUAL

Congratulations for choosing Vacon NX Non-Regenerative Front End!

The User's Manual will provide you with the necessary information about the installation, commissioning and operation of Vacon NX Non-Regenerative Front End. We recommend that you carefully study these instructions before powering up the Non-Regenerative Front End for the first time.

In the Non-Regenerative Front End Application Manual you will find information about the Non-regenerative Front End application. Should that application not meet the requirements of your process, please contact the manufacturer for information on special application.

This manual is available in both paper and electronic editions. We recommend you to use the electronic version if possible. If you have the electronic version at your disposal, you will be able to benefit from the following features:

The manual contains several links and cross-references to other locations in the manual, which makes it easier to move around in the manual. The reader can thus easily find and check things.

The manual also contains hyperlinks to web pages. To visit these web pages through the links, you must have an internet browser installed on your computer.

This manual is applicable only for Non-Regenerative Front End unit, AC choke and optional components that are introduced in this manual.

Vacon NXN User's Manual

Contents

Date edited: 06.04.2010

1. Safety 7
1.1 Warnings 7
1.2 Safety Instructions 7
1.3 Earthing 7
1.4 Warning symbols 8
2. EU DIRECTIVE 9
2.1 CE marking 9
2.2 EMC directive 9
2.2.1 Introduction 9
2.2.2 Technical criteria 9
2.2.3 Vacon Non-Regenerative Front End EMC classification 9
2.2.4 Manufacturer's declaration of conformity 9
3. RECEIPT OF DELIVERY 10
3.1 Type designation code for the NFE unit 10
3.2 Type designation code for the AC choke 11
3.3 Storage 12
3.4 Maintenance 12
3.5 Lifting the modules 13
3.6 Lifting the AC choke 14
3.7 Warranty 14
4. NON-REGENERATIVE FRONT END (NFE) 15
4.1 Introduction 15
4.2 Non-Regenerative Front End frame sizes 17
4.3 Non-Regenerative Front End unit technical data 18
4.4 Application 19
4.5 Diagrams 19
4.5.1 Connection between control unit and power unit 19
4.6 Non-Regenerative Front End power ratings 19
4.6.1 Vacon NXN; DC voltage 460–800V 19
4.6.2 Vacon NXN; DC voltage 640–1100V 20
4.7 Non-Regenerative Front End unit – Dimensions 20
4.8 AC choke – Dimensions 20
4.9 Non-Regenerative Front End – Fuse selection 21
4.9.1 Introduction 21
4.9.2 Fuses; mains voltage 380–690V 22
4.9.2.1 AC fuses 22
4.9.2.2 DC fuses 22
4.10 Non-Regenerative Front End unit – Circuit breaker selection 22
4.11 Non-Regenerative Front End unit – Main contactor 23
4.12 Pre-Charging and start up 23
4.13 Paralleling 23

4.14 12-pulse solution 23
4.15 Derating 24
4.15.1 As the Ambient Temperature 24
4.15.2 As the Installation altitude 24

5. Installation 26

5.1 Mounting 26
5.1.1 Non-Regenerative Front End Unit 26
5.1.2 AC choke 27
5.1.3 Control Box 28
5.2 Cooling 28
5.2.1 Non-Regenerative Front End unit 28
5.2.2 AC choke 30
5.2.3 Arranging ventilation of the enclosure 31
5.2.4 Steering air flow 32
5.3 Power connection 34
5.3.1 AC connection 34
5.3.2 DC connection 35
5.4 I/O terminals and I/O signals 35

6. Control keypad 38

6.1 Navigation 39
6.1.1 Monitoring menu 39
6.1.2 Parameter menu 40
6.1.3 Fault history menu 42
6.1.4 System menu 44

7. Appendices 45

1. SAFETY

ONLY A COMPETENT ELECTRICIAN MAY CARRY OUT THE ELECTRICAL INSTALLATION

1.1 Warnings

WARNING	1	The components of the power unit circuit are live when the Non-Regenerative Front End is connected to AC supply. Coming into contact with this voltage is extremely dangerous and may cause death or severe injury. The control unit is isolated from mains potential.
	2	The control I/O-terminals are isolated from the mains potential. However, the relay outputs and other I/O-terminals may have dangerous control voltage present even when the Non-Regenerative Front End is disconnected from the AC supply.
	3	Do not touch the components on the circuit boards. Static voltage discharge may damage the components.

1.2 Safety Instructions

	1	The Non-Regenerative Front End, AC choke and optional components are meant for fixed installations only.
	2	Do not perform any measurements when the Non-Regenerative Front End is connected to the AC supply.
	3	After having disconnected the Non-Regenerative Front End from the AC supply, wait until the fan stops. Wait 5 more minutes before doing any work on the Non-Regenerative Front End connections. Do not even open the cover before this time has expired.
	4	Do not perform any voltage withstand tests on any part of the Non-Regenerative Front End. There is a certain procedure according to which the tests shall be performed. Ignoring this procedure may result in damaged product.
	5	Before connecting the Non-Regenerative Front End to AC supply, make sure that the Non-Regenerative Front End front and cable covers are closed.
	6	Before doing any work on Common DC bus, system shall be earthen.

1.3 Earthing

The Non-Regenerative Front End unit and AC choke must always be earthed with an earthing conductor connected to the earthing terminal.

1.4 Warning symbols

For your own safety, please pay special attention to the instructions marked with the following symbols:

= *Dangerous voltage*

= *General warning*

= *Hot surface – Risk of burn*

2. EU DIRECTIVE

2.1 CE marking

The CE marking on the product guarantees the free movement of the product within the EEA (European Economic Area). It also guarantees that the product complies with applicable directives (for example, the EMC directive and other possible so-called new method directives). Vacon NX Non-Regenerative Front End carries the CE label as a proof of compliance with the Low Voltage Directive (LVD) and the Electro Magnetic Compatibility (EMC) directive. SGS FIMKO has acted as the Notified Body.

2.2 EMC directive

2.2.1 Introduction

The EMC Directive provides that the electrical apparatus must not excessively disturb the environment it is used in, and, on the other hand, it shall have an adequate level of immunity toward other disturbances from the same environment.

The compliance of Vacon NX Non-Regenerative Front End with the EMC directive is verified with Technical Construction Files (TCF) and checked and approved by SGS FIMKO, which is a Notified Body. The Technical Construction Files are used to authenticate the conformity of Vacon NX Non-Regenerative Front End with the Directive because it is impossible to test such a large product family in a laboratory environment and because the combinations of installation vary greatly.

2.2.2 Technical criteria

Our basic idea was to develop a range of Vacon NX Non-Regenerative Front End offering the best possible usability and cost efficiency. EMC compliance was a major consideration from the outset of the design.

2.2.3 Vacon Non-Regenerative Front End EMC classification

Factory delivered Vacon NX Non-Regenerative Front End are Class T equipment, which fulfills all EMC immunity requirements (standard EN 61800-3).

Class T:
Class T equipment have a small earth leaking current and can be used with floating DC input.

> **Warning**: This product is of the restricted sales distribution class according to IEC 61800-3. In residential areas, this product may cause radio interference in which case the user may be required to take adequate measures.

2.2.4 Manufacturer's declaration of conformity

The following page presents the photocopy of the Manufacturer's Declaration of Conformity assuring the compliance of Vacon NX Non-Regenerative Front End with the EMC-directives.

3. RECEIPT OF DELIVERY

Vacon NX Non-Regenerative Front End has undergone scrupulous tests and quality checks at the factory before they are delivered to the customer. However, after unpacking the product, check that no signs of transportation damage are to be found on the product and that the delivery is complete (compare the type designation of the product to the codes below, see Figure 3-1 and Figure 3-2).

Should the product have been damaged during the shipping, please contact primarily the cargo insurance company or the carrier.

If the delivery does not correspond to your order, contact the supplier immediately.

3.1 Type designation code for the NFE unit

In Vacon type designation code for Common DC Bus components, the Non-Regenerative Front End Unit is characterized by letter N and letter N or S. If the Non-Regenerative Front End unit is ordered by letter N delivery is not include anything else than the unit itself. If letter S is used delivery include the unit, the AC choke.

NOTE! Delivery NOT includes in any case auxiliary devices which are needed for proper operation (the AC or DC fuses, the fuses bases, the main contactor or circuit breaker etc.) These shall be take care by the customer.

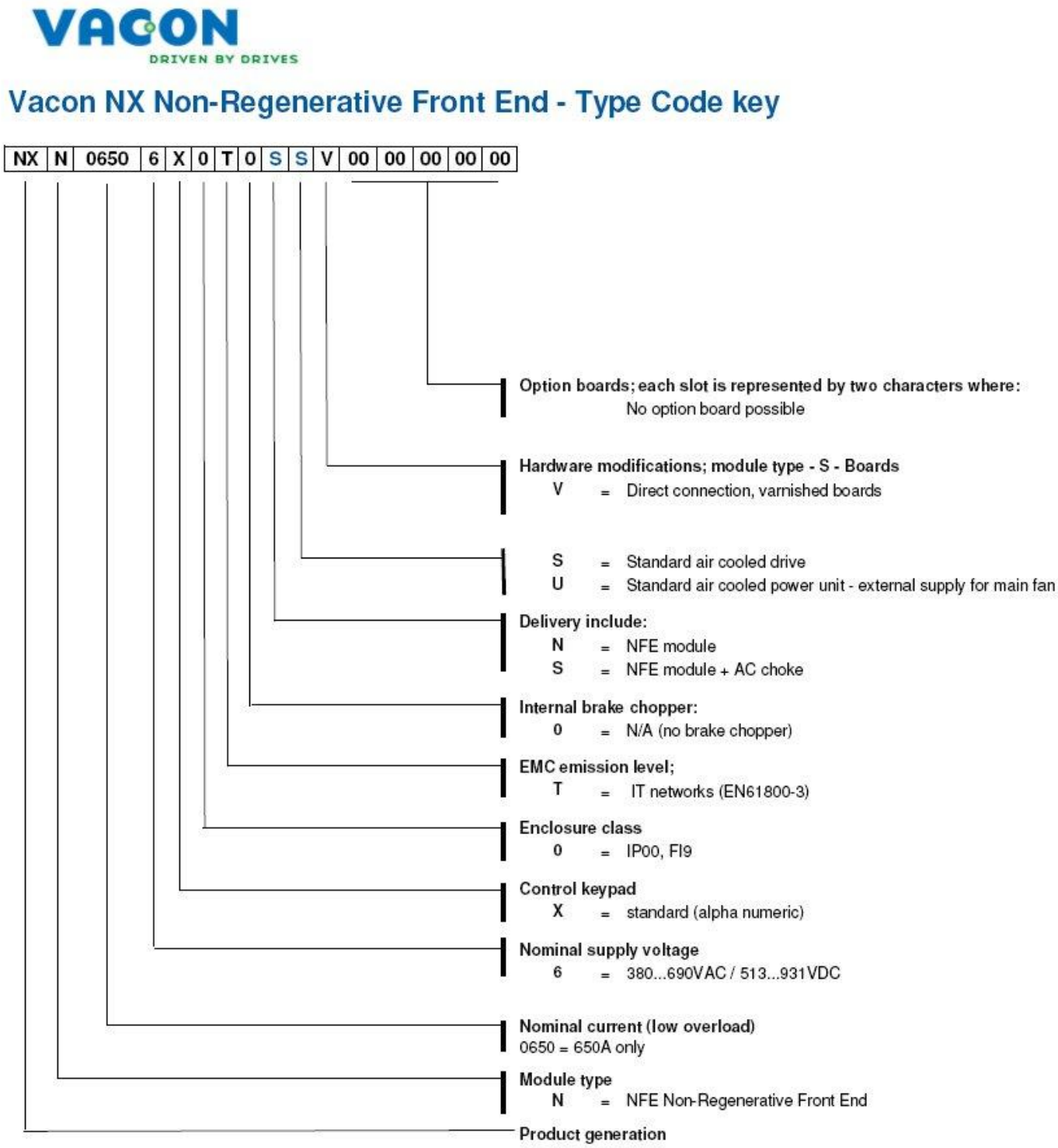

Figure 3-1. Type designation code for the Non-Regenerative Front End.

3.2 Type designation code for the AC choke

AC choke has one version which is suitable for 380-500V and 525-690V voltages.

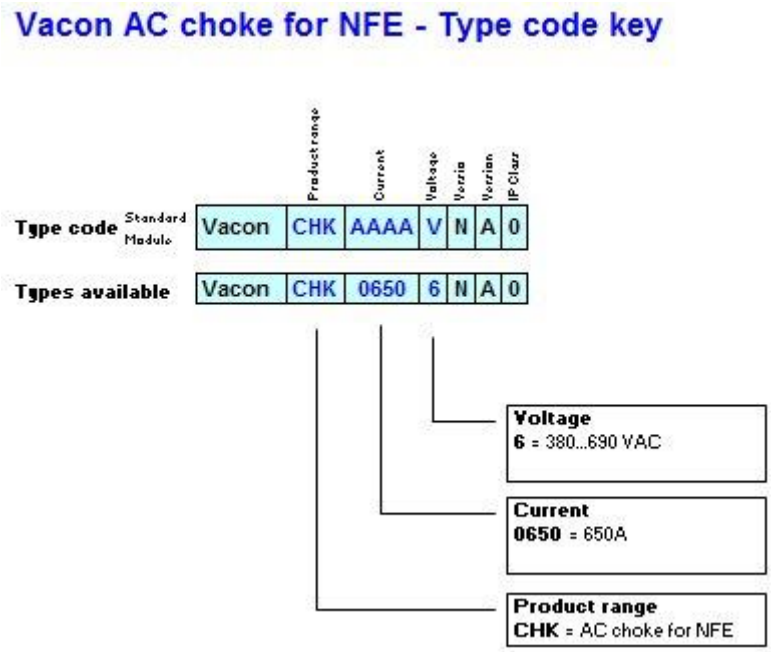

Figure 3-2. Type designation code for the AC choke.

3.3 Storage

If Vacon NX Non-Regenerative Front End is to be stored before use, make sure that the ambient conditions are acceptable:

Storage temperature	–40...+70°C
Relative humidity	<95%, no condensation

3.4 Maintenance

All technical devices, drives as well, need a certain amount of care-taking and failure preventive maintenance. To maintain trouble-free operation of the Vacon NX Non-Regenerative Front End, environmental conditions, as well as load, line power, process control, etc. have to be within specifications, determined by manufacturer.

If all conditions are in accordance with the manufacturer's specifications, there are no other concerns, but to provide a cooling capacity high enough for the power- and control circuits. This requirement can be met by making sure, that the cooling system works properly. Operation of cooling fans and cleanness of the heat sink should be verified regularly.

Regular maintenance is recommended to ensure trouble free operation and long lifetime of Vacon NX Non-Regenerative Front End. At least the following things should be included in the regular maintenance.

Interval	Maintenance
6 - 24 months (depending on evironment)	Check tightening torque of the input and output terminals and I/0-terminals Clean the cooling tunnel Check operation of the cooling fan, check for corrosion on terminals, busbars and other surfaces Check the door filters
5 - 7 years	Change the main cooling fan

Table 3-1. Maintenance interval

It may also be necessary to check the tightening torques of terminals at certain intervals.

It is also recommended to record all actions and counter values with dates and time for follow up of maintenance. It may also be necessary to check the tightening torques of terminals at certain intervals.

3.5 Lifting the modules

The modules can be lifted by the holes on top. Place the lifting hooks symmetrically in at least four holes. The maximum allowed lifting angle is 45 degrees. For frames FI9, see Figure 3-3.

The lifting equipment must be able to carry the weight of the module.

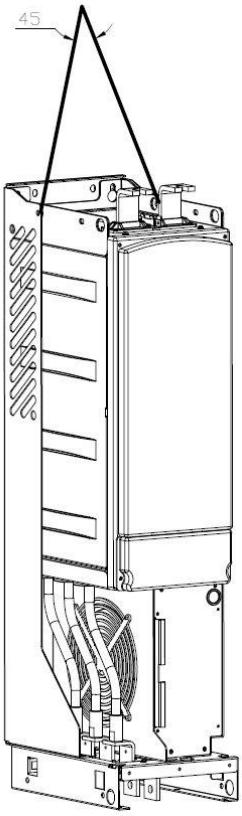

Figure 3-3. Lifting points for FI9 module.

3.6 Lifting the AC choke

The AC choke can be lifted by the holes on top. Place the lifting hooks symmetrically in two holes. The maximum allowed lifting angle is 45 degrees. Lifting points for the AC choke, see Figure 3-4.

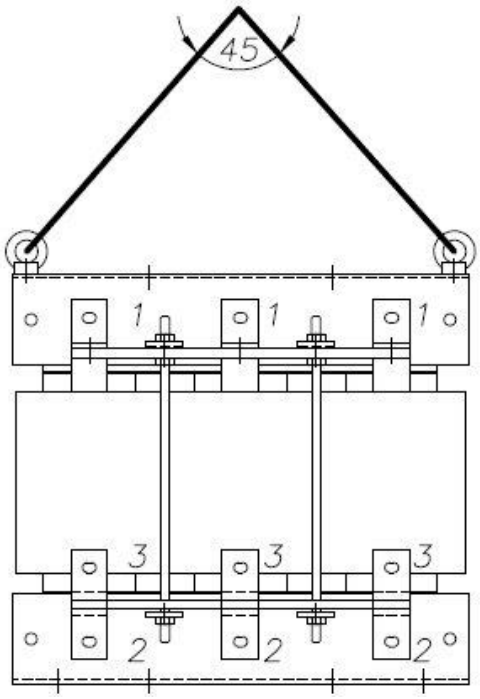

Figure 3-4. Lifting points for AC choke.

3.7 Warranty

Only manufacturing defects are covered by the warranty. The manufacturer assumes no responsibility for damages caused during or resulting from transport, receipt of the delivery, installation, commissioning or use.

The manufacturer shall in no event and under no circumstances be held responsible for damages and failures resulting from misuse, wrong installation, unacceptable ambient temperature, dust, corrosive substances or operation outside the rated specifications.

Neither can the manufacturer be held responsible for consequential damages.

The Manufacturer's warranty period is 18 months from the delivery or 12 months from the commissioning whichever expires first (General delivery terms NL92/Orgalime S92).

The local distributor may grant a warranty time different from the above. This warranty time shall be specified in the distributor's sales and warranty terms. Vacon assumes no responsibility for any other warranties than that granted by Vacon itself.

In all matters concerning the warranty, please contact your distributor first.

4. NON-REGENERATIVE FRONT END (NFE)

4.1 Introduction

The Vacon NX Non-Regenerative Front End is used to transfer power between the AC input and intermediate DC circuit. The Vacon NX Non-Regenerative Front End has only a one-way function. This means that power can only be transferred from the AC input to the intermediate DC circuit. If braking is needed brake chopper has to be connected to the intermediate DC circuit.

In a typical Vacon NX Non-Regenerative Front End configuration, the desired number of Inverters, Figure 4-1, are connected to the intermediate DC circuit.

The Non-Regenerative Front End configuration consists of the unit itself, AC choke, AC fuses, main contactor and DC fuses, Figure 4-2.

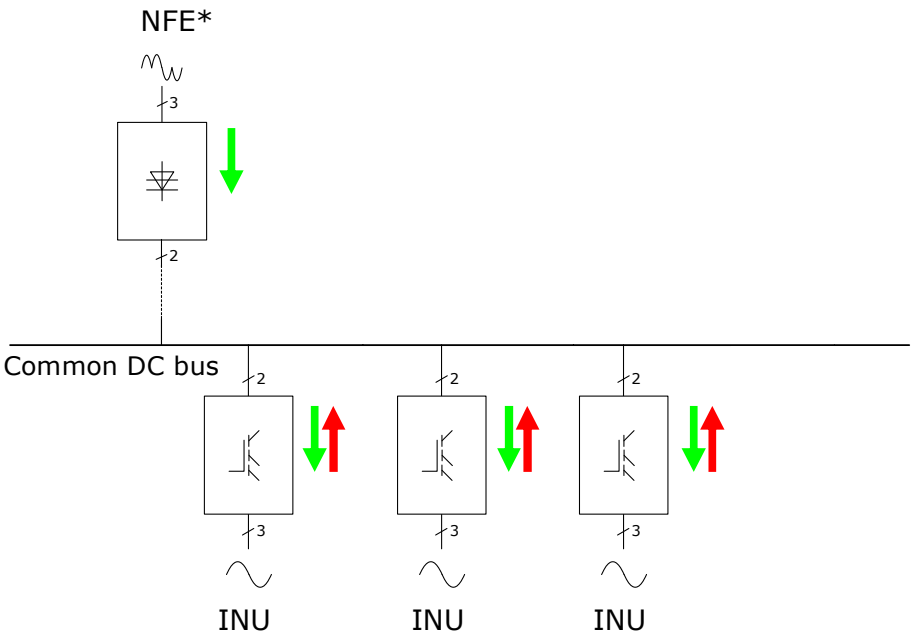

Figure 4-1. Typical Non-Regenerative Front End configuration.

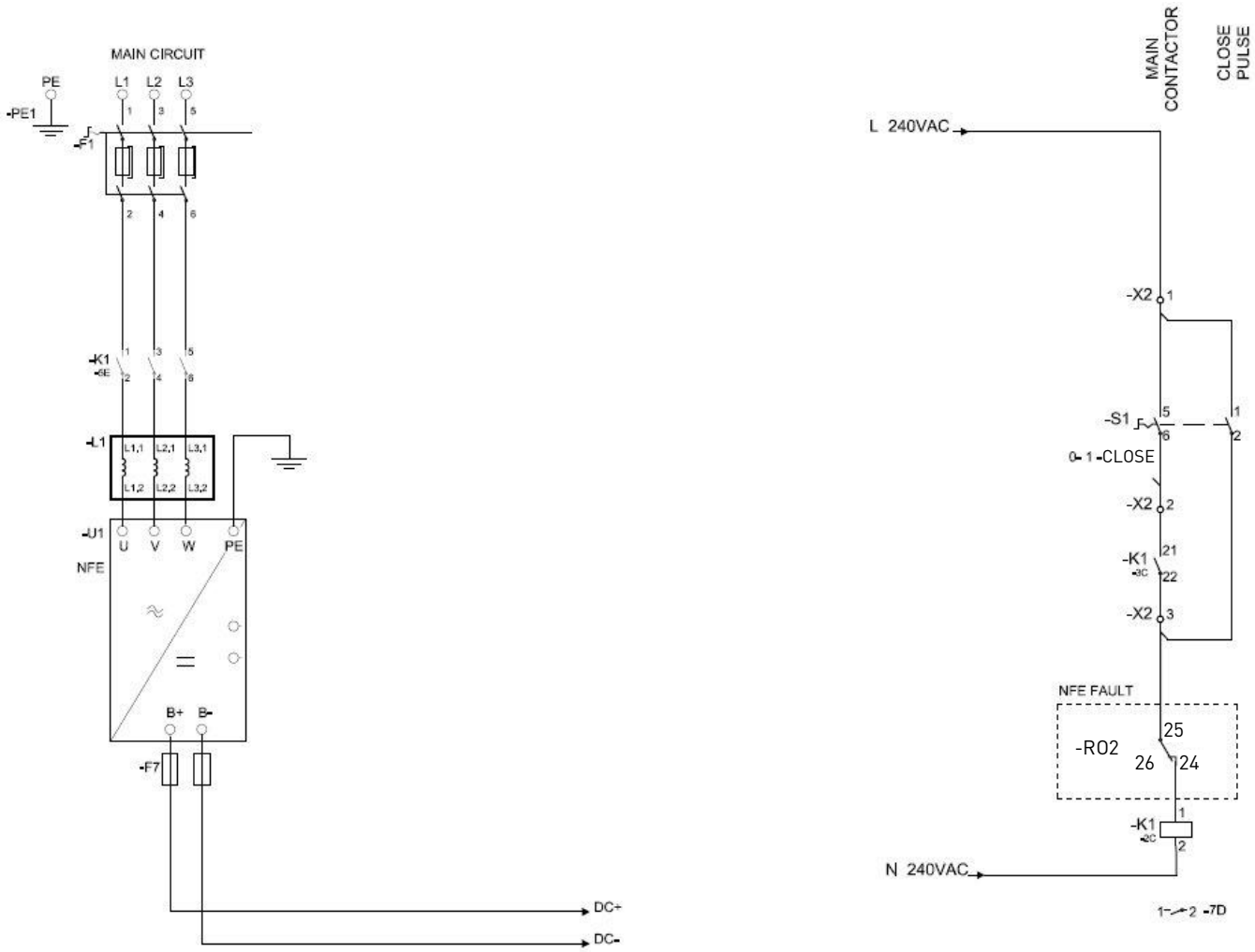

Figure 4-2. Vacon Non-Regenerative Front End Single Unit connections

4.2 Non-Regenerative Front End frame sizes

Figure 4-3. Vacon NXN, FI9. Protection class IP00

4.3 Non-Regenerative Front End unit technical data

Mains connection	Input voltage U_{in}	380 - 690 Vac; -15%...+10%, EN 60204-1
	Input frequency	45…66 Hz
	Continuous input current	I_H: Ambient temperature max. +40°C, overload 1.5 x I_H (1 min./10 min.) I_L: Ambient temperature max. +40°C, overload 1.1 x I_L (1 min./10 min.)
	Connection to mains	Unlimited (internal overload protections)
	Current THD	Depend on additional chokes (normal case < 40%)
	Starting delay	Depend on dc bus capacitance (max 10 s)
	Unexpected input power break	Shorter breaks than 40ms works normally if DC does not drop remarkably. Longer break means normal starting operation (charging current varies according to load).
DC connection	Output voltage U_{out}	465...800Vdc (380-500 Vac); 640...1100Vdc (525-690 Vac);
	Efficiency	>98%
	DC bank capasitance	6,8µF (included 10 M discharging resistor)
Control characteristics	Control method	NFE is an independent power unit. Charging and protections controlled by NFE itself.
Ambient conditions	Ambient operating temperature	–10°C (no frost)...+40°C: I_H –10°C (no frost)...+40°C: I_L
	Storage temperature	–40°C…+70°C
	Relative humidity	0 to 95% RH, non-condensing, non-corrosive, no dripping water
	Air quality: - chemical vapours - mechanical particles	 IEC 721-3-3, unit in operation, class 3C2 IEC 721-3-3, unit in operation, class 3S2
	Altitude	100% load capacity (no derating) up to 1,000 m 1-% derating for each 100m above 1000.; max. 2000m
	Vibration EN50178/EN60068-2-6	5...150 Hz Displacement amplitude 0,25 mm (peak) at 5...31 Hz Max acceleration 1 G at 31...150 Hz
	Shock EN50178, EN60068-2-27	UPS Drop Test (for applicable UPS weights) Storage and shipping: max 15 G, 11 ms (in package)
	Cooling air required	1150 m^3/h
	Enclosure class	IP00
EMC (at default settings)	Immunity	Fulfil all EMC immunity requirements. Can be chosen N-, L- or T-level.
Safety		CE, UL, CUL EN 61800-5-1 (2003); (see unit nameplate for more detailed approvals)
Control connections	Display	LCD
	Trip information	Relay I/O
	Auxiliary voltage	+24 V, +/- 20%, max. load 50 mA
	Analogue output	0(4)-20 mA, RL=500 Ohm
	Digital output	Open collector, max. Load 48V/50 mA
	Relay outputs	Max switching load: 250Vac/2A or 250Vdc/0,4 A
Protections	Unit over temperature protection	Trips if temperature rising over trip level (default)
	Current measurement	Trips if current over trip level (default)
	Supply phase supervision	Trips if any of the output phases is missing (default)

Table 4-1. Technical specification for Vacon NX Non-Regenerative Front End unit

4.4 Application

The Vacon NX Non-Regenerative Front End needs a special application. The unit is delivered with that application. If application code is needed please contact please contact the manufacturer. More information about application can be found from this manual.

4.5 Diagrams

4.5.1 Connection between control unit and power unit

The communication connections between the Non-Regenerative Front End power unit and the *control unit* is established using serial cable, Figure 4-4. The control unit is located under the front cover of the power unit. The control unit cannot place outside of the power unit.

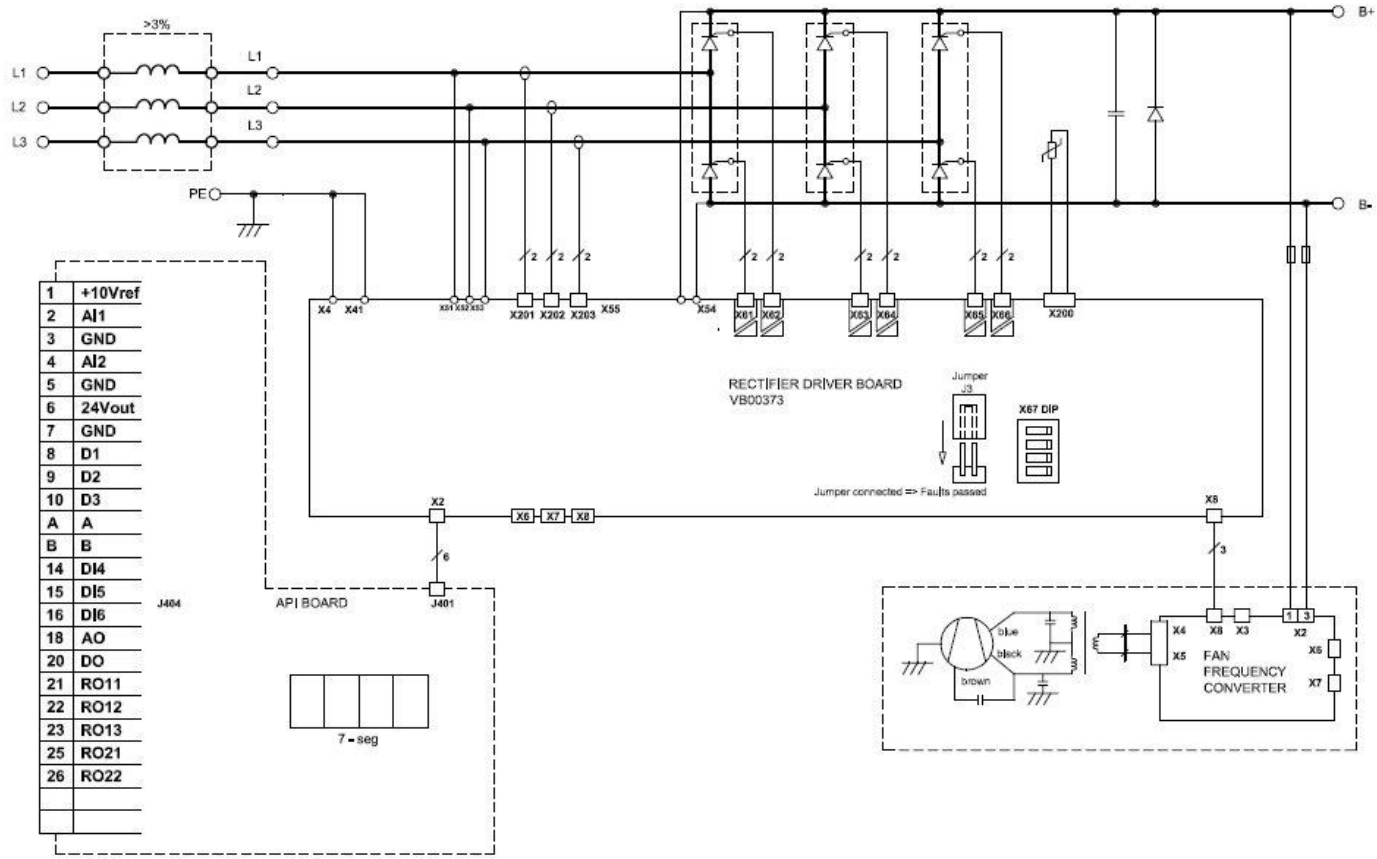

Figure 4-4. NFE power and control connections.

4.6 Non-Regenerative Front End power ratings

4.6.1 Vacon NXN; DC voltage 460–800V

	Unit		Low oveload (AC current)		High oveload (AC current)		DC Power (continuous)	
Type	Code	Frame	$I_{L\text{-cont}}$ [A]	$I_{1\,min}$ [A]	$I_{H\text{-cont}}$ [A]	$I_{1\,min}$ [A]	400V mains P [kW]	500 V mains P [kW]
NFE	NXN_0650 6	FI9	650	715	507	793	410	513

Table 4-2. Power ratings of Vacon NXN, supply voltage 460–800Vdc

For dimensions of NXN units, see Table 4-4 and AC choke Table 4-5.

Note: The rated currents in given ambient (+40°C).

Note: The motor output power: $P_{out}=P_{dc}$ x ($Eff._{INU}$ x $Eff._{Motor}$).
P_{dc} =NFEs DC power
$Eff._{INU}$=efficiency of the inverter
$Eff._{Motor}$=efficiency of the motor

4.6.2 Vacon NXN; DC voltage 640–1100V

	Unit		Low oveload (AC current)		High oveload (AC current)		DC Power (continuous)
Type	Code	Frame	$I_{L\text{-}cont}$ [A]	I_{1min} [A]	$I_{H\text{-}cont}$ [A]	I_{1min} [A]	690V mains P [kW]
NFE	NXN_0650 6	FI9	650	715	507	793	708

Table 4-3. Power ratings of Vacon NXN, supply voltage 640–1100Vdc

For dimensions of NXN unit, see Table 4-4 and AC choke Table 4-5.

Note: The rated currents in given ambient (+40°C).

Note: The motor output power: $P_{out}=P_{dc}$ x ($Eff._{INU}$ x $Eff._{Motor}$).
P_{dc} =NFEs DC power
$Eff._{INU}$=efficiency of the inverter
$Eff._{Motor}$=efficiency of the motor

4.7 Non-Regenerative Front End unit – Dimensions

Module		Module Dimension			
Type	Frame	Height [mm]	Width [mm]	Depth [mm]	Weight [kg]
NFE	FI9	1030	239	372	67

Table 4-4. The NXN unit dimensions

Note: More detailed dimensions can be found Appendix 7-4.

4.8 AC choke – Dimensions

Module		Module Dimension			
Type	Frame	Height [mm]	Width [mm]	Depth [mm]	Weight [kg]
AC choke	CHK-650	449	497	249	130

Table 4-5. AC choke dimensions

Note: More detailed dimensions can be found Appendix 7-5.

4.9 Non-Regenerative Front End – Fuse selection

4.9.1 Introduction

AC fuses are used to protect the input network in case the Non-Regenerative Front End unit or the AC choke is faulty. DC fuses are used to protect the Non-Regenerative Front End unit and the AC choke in case there is a short circuit in the DC buses. If DC fuses are not used, short-circuit in the DC buses will cause a loading of the Non-Regenerative Front End unit. Vacon Plc will not assume any responsibility for damages caused by insufficient protection.

4.9.2 Fuses; mains voltage 380–690V

4.9.2.1 AC fuses

Module			AC fuses				
Type	Code	Frame	Ferraz Shawmut type [aR]*	U_N [V]	I_N [A]	Size	Q'ty
NFE	NXN_0650 6	FI9	NH3UD69V1000PV	690	1000	3	3

Table 4-6. Ferraz Shawmut AC fuse selection, mains voltage 380–690Vac

Module			AC fuses				
Type	Code	Frame	Bussman type [aR]*	U_N [V]	I_N [A]	Size	Q'ty
NFE	NXN_0650 6	FI9	170M6466	690	1250	3BKN/50	3

Table 4-7. Bussman AC fuse selection, mains voltage 380–690Vac

Note: All fuses are blade type. If some other type is needed please contact Vacon.

4.9.2.2 DC fuses

Module			DC fuses				
Type	Code	Frame	Ferraz Shawmut type [aR]*	U_N [V]	I_N [A]	Size	Q'ty
NFE	NXN_0650 6	FI9	PC73UD11C13CTF	1100	1250	73(LR)	2

Table 4-8. Ferraz Shawmut DC fuse selection, mains voltage 465–1100Vdc

Module			DC fuses				
Type	Code	Frame	Bussman type [aR]*	U_N [V]	I_N [A]	Size	Q'ty
NFE	NXN_0650 6	FI9	170M8610	1000	1000	3BKN/75	2

Table 4-9. Bussman DC fuse selection, mains voltage 465–1100Vdc

Note: All fuses are flush-end type. If some other type is needed please contact Vacon.

4.10 Non-Regenerative Front End unit – Circuit breaker selection

The Non-Regenerative Front End can also be protected by a circuit-breaker. The recommended type of circuit-breaker is shown in Table 4-10. If a circuit-breaker from another manufacturer is used, it must be equivalent to the circuit-breaker shown. Further information on the circuit-breaker shown is available from the manufacturer. Circuit-breaker does not provide the same level of protection as fuses. A circuit-breaker can be used without a main contactor. The circuit-breakers shown are suitable for equipment rated at 380–690 V.

Type	T6V630FF3LS	
FI9	T6V630FF3LS AUX-C3+1/T4-5 PB100/T6-3P	MCCB Aux./alarm cont.(cabled) Phase separators for upper/lower terminals

Table 4-10. Circuit breaker for Vacon NXN

4.11 Non-Regenerative Front End unit – Main contactor

If a main contactor is to be used, the type shown in Table 4-11 are recommended. If a contactor from another manufacturer is used, it must be equivalent to the types shown. Further information on the contactor shown is available from the manufacturer.

Type		FI9 Contactor / 380-690V
FI9	AF580-30-11-70	Contactor, 800A/690V, 100...250 V AC/DC-coil

Table 4-11. Recommended main contactor type.

4.12 Pre-Charging and start up

External pre-charging circuit is not needed with the Non-Regenerative Front End. Pre-charging is done by controlling thyristors and the DC link voltage is charged smoothly. Pre-charging is current limit controlled. Due to this, the charging time varies depending on DC link capacitance. The Non-Regenerative Front End performs charging when the main contactor is closed and a start signal is applied to DIN1. The NFE goes into run mode after successful charging. If Non-regenerative Front Ends are connected in parallel, each module charges DC link voltage independently. Parallel connected modules can be connected to the supply simultaneously or one module at a time. See Appendix 7-2 for the circuit diagram of parallel connected NFE modules.

The Non-Regenerative Front End monitors the pre-charging process. If the time of charging is over the adjustable pre-charging monitoring time (default 10s) a fault is indicated. If the DC link capacitance is so high that the default value for charging monitoring is not enough, the value can be increased.

4.13 Paralleling

The power of the input group can be increased by connecting several Non-Regenerative Front End units in parallel. No communication between the units is required; they work independently.

Each Non-Regenerative Front End unit connected in parallel must have its own short-circuit protection on AC and DC sides. The fuses are selected in accordance with Section 4.9. When paralleling, attention must be paid to the sufficient short-circuit capacity of the system.

The derating of Non-Regenerative Front End units connected in parallel is 5% of the DC power; this should be taken into account when selecting the input unit.

If a device is to be isolated from the AC and DC voltages, and other Non-Regenerative Front End units connected in parallel are also to be used, separate isolators are required in the AC input and DC output. The AC input can be isolated using a compact circuit-breaker, an ordinary circuit-breaker or a fuse switch. Contactors are not suitable for isolating the AC input because they cannot be locked in the safe position. The DC output can be isolated using a fuse switch. A load isolation switch or safety isolation switch can be used for this. The device can also be connected to mains even when the other devices connected in parallel are already connected and running. After this, the device can be connected to the intermediate circuit.

Note: Parallel connection means that the AC supply of more than one units connected together from DC link is coupled with the same supply transformer.

4.14 12-pulse solution

In 12-pulse solution the supply transformer has two galvanically separated secondary circuits, see Appendix 7-3. The 12-pulse solution can reduce the effect of harmonic waves of the current in the supply network. In order to reduce the effect of harmonics, there must be a phase displacement of 30° between the secondary circuits of the transformer. The phase displacement is implemented by connecting one secondary circuit to triangle and the other to star. In 12-pulse solution there must be an equal number of non-regenerative units connected to the both secondary coils of the supply transformer.

4.15 Derating

The output power has to be derated if one of following cases:

- Ambient temperature is more than 40°C
- Installation altitude is more than 1000 m

4.15.1 As the Ambient Temperature

The power rating of the Non-Regenerative Front End unit is valid for an ambient temperature of 40°C. If the device is to be used in higher ambient temperatures, its power rating must be subjected to derating. The derating coefficient is 1.5%/1°C, for ambient temperatures not exceeding 50°C. The reduced power is calculated using the formula:

$$P_{de} = P_n * ((100\% - (t - 40^{\circ}\mathrm{C}) * \mathrm{x})/100)$$

P_n = nominal power of the unit
t = ambient temperature
x = derating coefficient

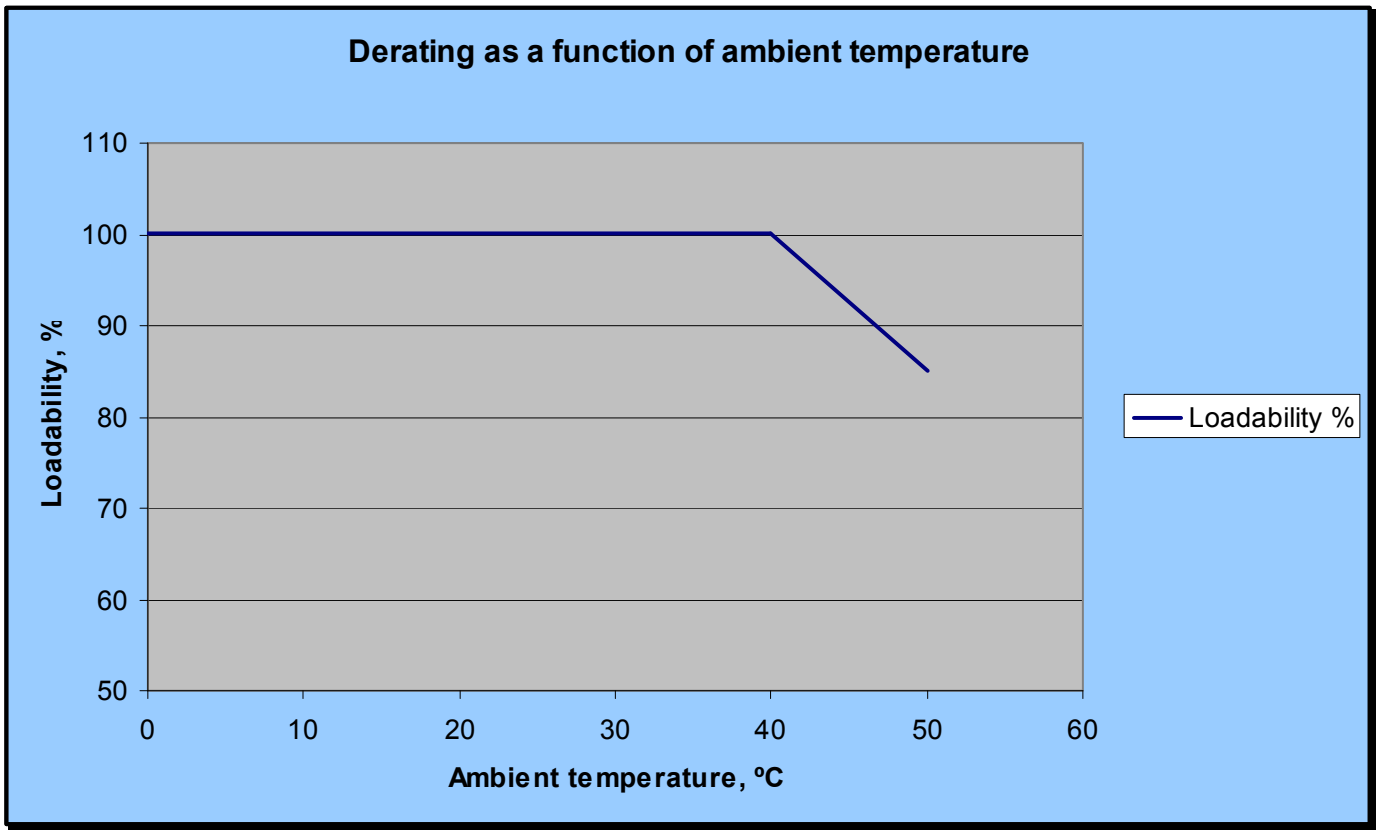

Figure 4-5. Derating as the ambient temperature.

4.15.2 As the Installation altitude

The power rating of the Non-Regenerative Front End unit is valid for a maximum installation altitude of 1,000 m (380-690 V). If the device is to be used in higher installation altitudes, its power rating must be subjected to derating. The derating coefficient is 1.5%/100m. The power rating of the device can be reduced to a maximum installation altitude of 3,000 m (380V-500V) or of 2000 m (525V-690V). The reduced power is calculated using the formula:

$$P_{de} = P_n * ((100\% - (h_{inst} - h_{base}) * \mathrm{x})/100)$$

P_n = nominal power of the unit
h_{inst} = intended installation altitude
h_{base} = 1,000 m
x = derating coefficient

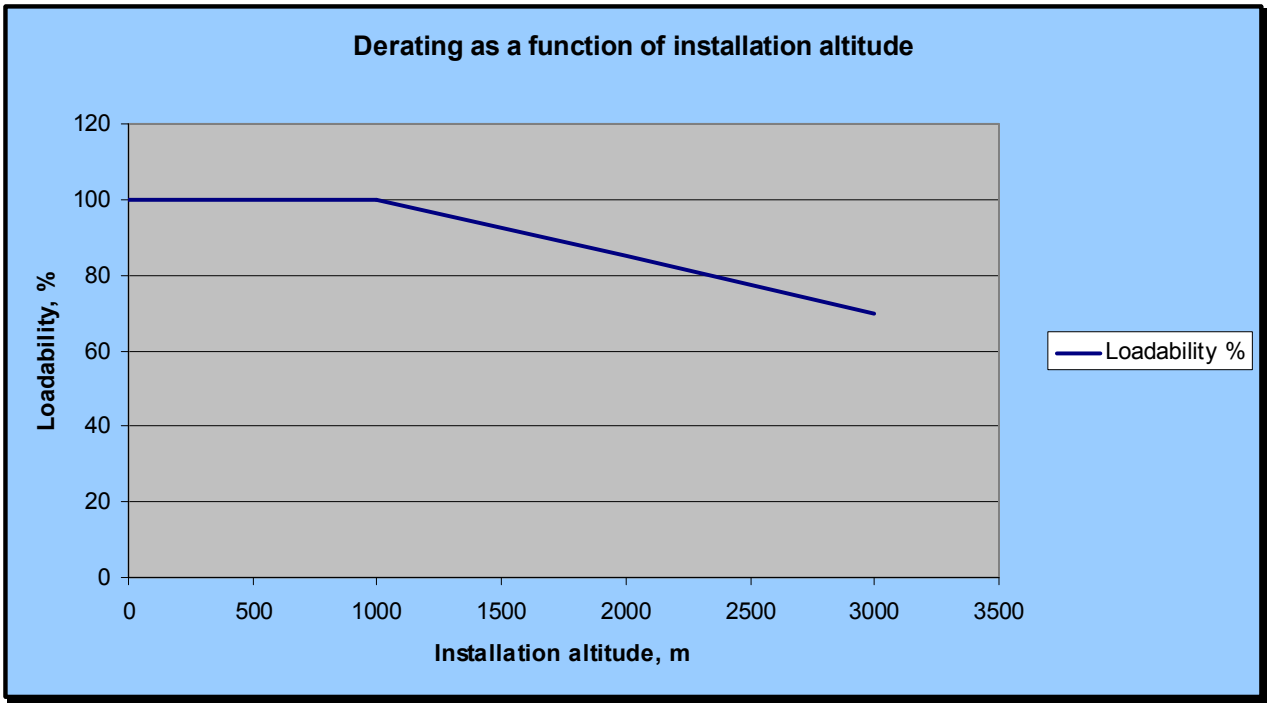

Figure 4-6. Derating as the installation altitude 380-500V.

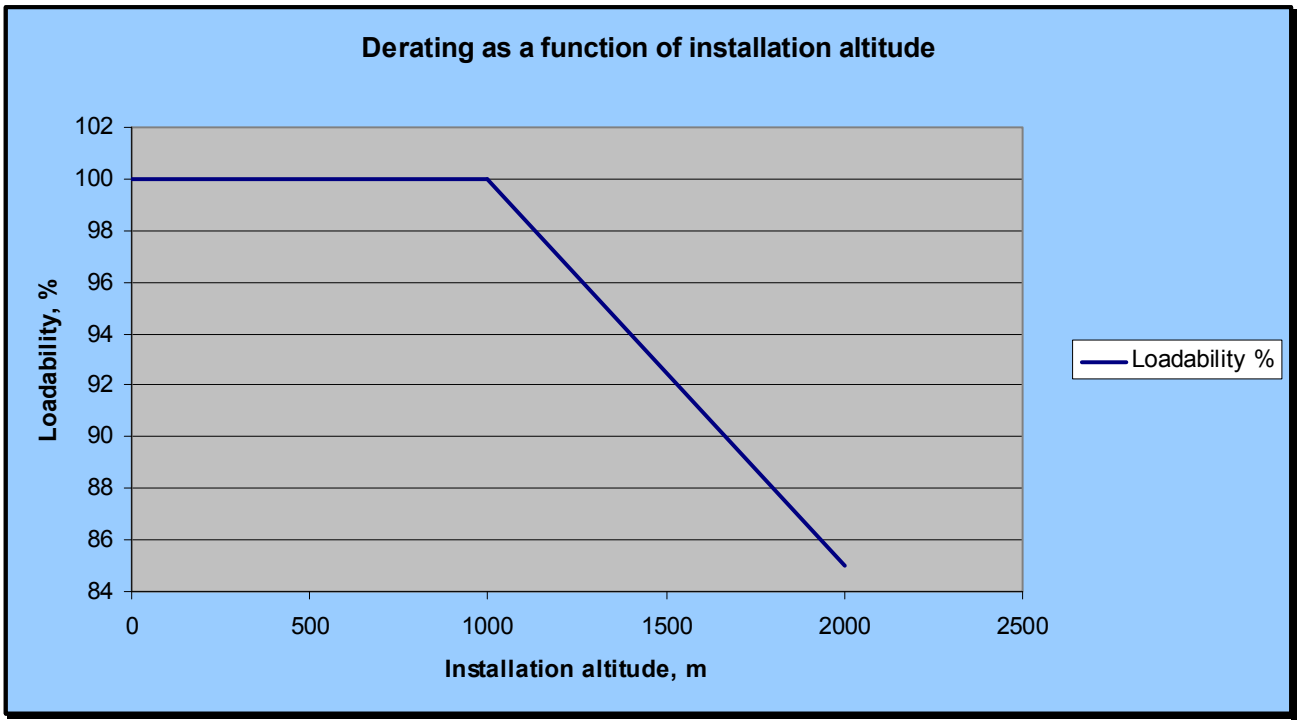

Figure 4-7. Derating as the installation altitude 525-690V.

Note: If higher installation altitude than 3,000 m is required please contacts your nearest Vacon office to get more information.

5. INSTALLATION

5.1 Mounting

The equipment mounting must be sturdy enough to carry the weight of the equipment. The enclosure class of the equipment will depend on the mounting and solutions to be used. The equipment mounting must provide sufficient shielding for contact of the live parts (IP2x). The installation and mounting must comply with local laws and regulations.

5.1.1 Non-Regenerative Front End Unit

The Non-Regenerative Front End can be mounted in a vertical position on the back plane of a cubicle. Enough space must be reserved around the Non-Regenerative Front End to ensure sufficient cooling, see Figure 5-5. Follow the minimum dimensions for installation, see Table 5-1. Required cooling air capacity and minimum air holes on the switchgear, see Table 5-2. Also make sure that the mounting plane is relatively even. The Non-Regenerative Front End is fixed with four bolts, Figure 5-1.

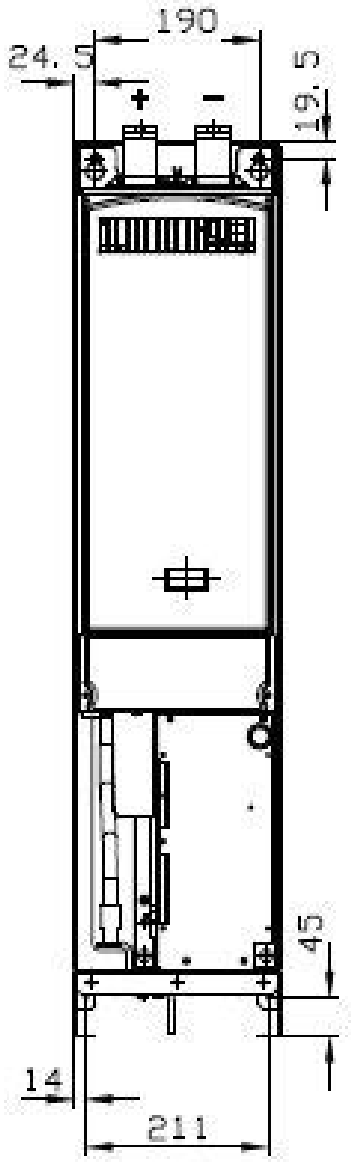

Figure 5-1. Mounting points of FI9 NFE unit.

5.1.2 AC choke

The AC choke can only be mounted in a vertical position on the floor of a cubicle. Enough space must be reserved around the AC choke to ensure sufficient cooling, see Figure 5-7. Follow the minimum dimensions for installation, see Table 5-3. Required cooling air capacity and minimum air holes on the switchgear, see Table 5-4. Also make sure that the floor is relatively even. AC choke must be attached properly so that it will not be able to move.

AC choke can be mounted so that the connectors face forward or so that they face to the side. Figure 5-2 presents a mounting where the connectors face forward. Figure 5-3 presents a mounting where the connectors face to the side. This mounting is recommended if the Non-Regenerative Front End units are parallel connected. In this case it must be assured that the connectors face to the same direction and that there is enough space between the connectors and the AC choke.

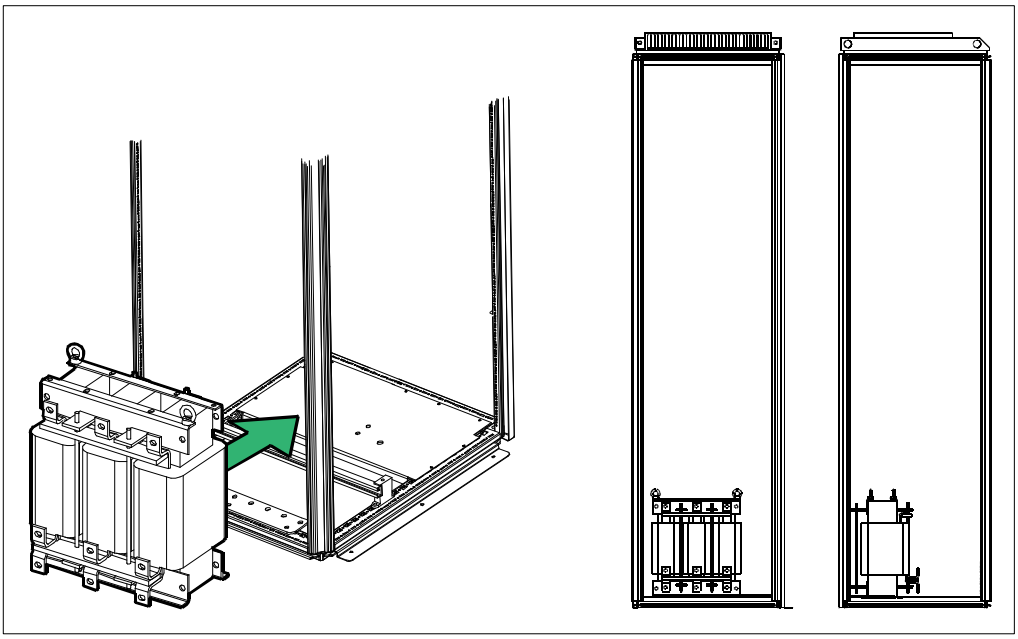

Figure 5-2. Mounting of AC choke.

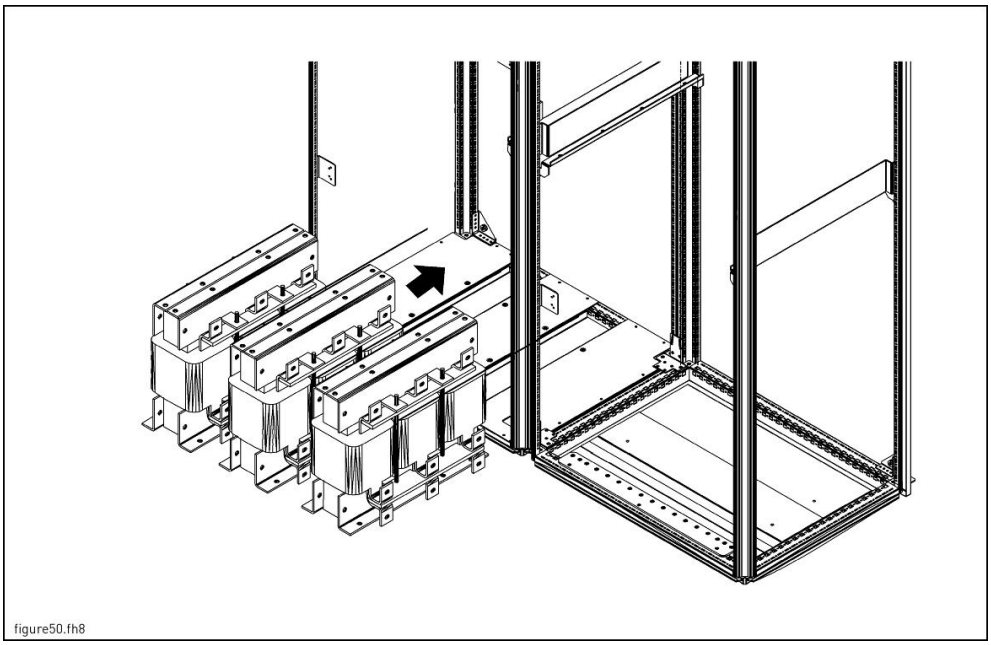

Figure 5-3. Mounting of parallel connected AC chokes.

5.1.3 Control Box

The Control unit of the Non-Regenerative Front End unit is mounted under the front cover of module, see Figure 5-4. Vacon an alphanumeric display and the navigation wheel can be used for parameterization and monitoring of the Non-Regenerative Front End unit.

Figure 5-4. Mounting of the control unit.

5.2 Cooling

5.2.1 Non-Regenerative Front End unit

Enough free space must be left around the Non-Regenerative Front End unit to ensure sufficient air circulation and cooling. You will find the required dimensions for free space in the table below. You will find the required cooling air, minimum air holes and heat dissipation in the Table 5-2.

When planning the cooling for the space, take into consideration that the Non-Regenerative Front End unit heat loss is approx. 1% of the nominal capacity. Air flow, see Figure 5-6.

Type	Dimensions [mm]			
	A	*B*	*C*	D
NXN_0650 6	200	0	100	0

Table 5-1. Mounting space dimensions.

A = free space above the unit
B = distance between inverter and cabinet wall
C = free space underneath of the units
D = distance between two units

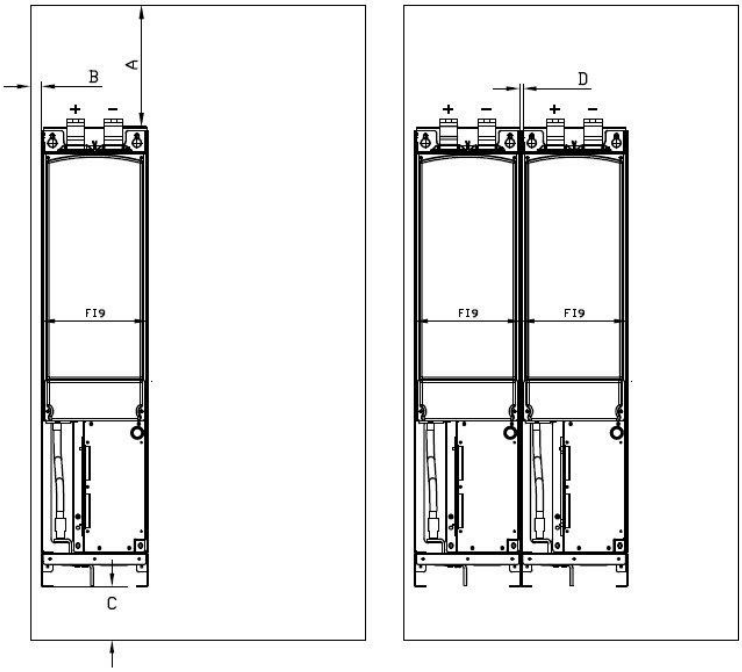

Figure 5-5. Installation space for FI9.

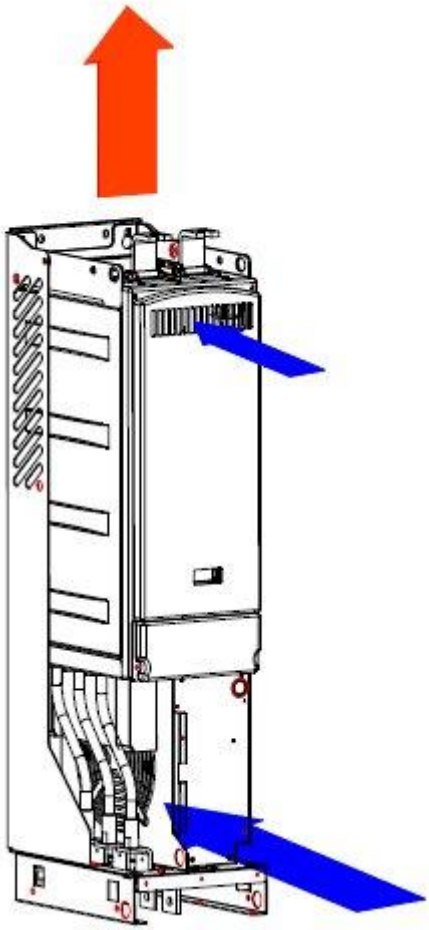

Figure 5-6. Cooling airflow for FI9 NFE unit.

Type	Heat dissipation (W)	Cooling air required (m^3/h)	Minimum air holes on switchgear (mm^2)
NXN_0650 6	2450	1150	65000

Table 5-2. Required cooling air for the Non-Regenerative Front End unit.

5.2.2 AC choke

Enough free space must be left around the AC choke to ensure sufficient air circulation and cooling. You will find the required dimensions for free space in the table below. You will find the required cooling air, minimum air holes and heat dissipation in the Table 5-4.

When planning the cooling for the space, take into consideration that the AC choke heat loss is approx. 0,5% of the nominal capacity.

Type	Dimensions [mm]				
	A	B	C	D	E
CHK-0650-6	160	50	0	50	50

Table 5-3. Mounting space dimensions.

A = free space above the AC choke
B = distance between AC choke and cabinet wall
C = free space under the AC choke
D = distance between AC choke and cabinet wall
E = distance between AC choke and cabinet wall

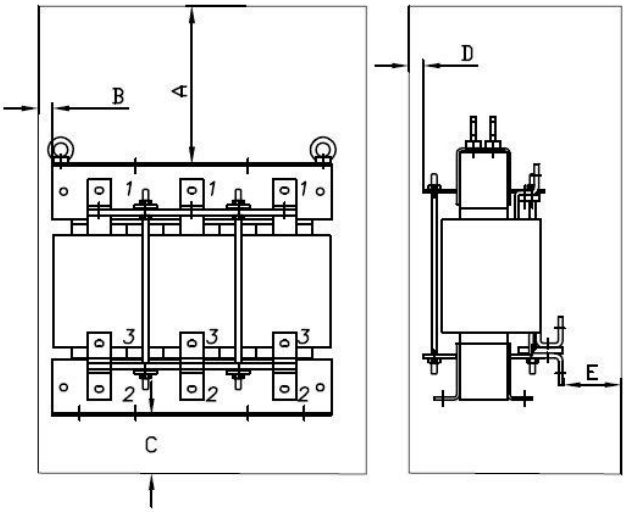

Figure 5-7. Installation space.

Type	Heat dissipation (W)	Minimum air holes on switchgear (mm^2)
CHK-0650-6	890	30000

Table 5-4. Required cooling air for the AC choke.

5.2.3 Arranging ventilation of the enclosure

The enclosure door must be provided with air gaps for air intake. To achieve sufficient cooling inside the cabinet, the dimensions for the total area of free openings for incoming air given in Table 5-2 and Table 5-4 must be followed. For instance, there could be two screened gaps as presented in Figure 5-8 (Vacon's recommendation). This layout ensures a sufficient air flow to the module fans as well as cooling of the additional components.

Air outlet gaps must be situated on top of the cabinet. The minimum effective air outlet area per unit frame is given in Table 5-2 and Table 5-4. The cooling arrangements inside the cabinet must be such that they prevent hot output air from mixing with the incoming fresh air (see Chapter 5.2.4).

The ventilation gaps must fulfill the requirements set by the selected IP class. The examples in this manual apply to protection class IP21.

During operation, air is sucked in and circulated by a fan blower at the bottom of the power unit. If the power unit is placed in the upper part of the cabinet, the fan blower will be in the mid of the cabinet, at the height of the upper ventilation grid. In case of the AC choke is installed below the Non-Regenerative Front End unit air inlet 1.1 in Figure 5-8 cannot be used.

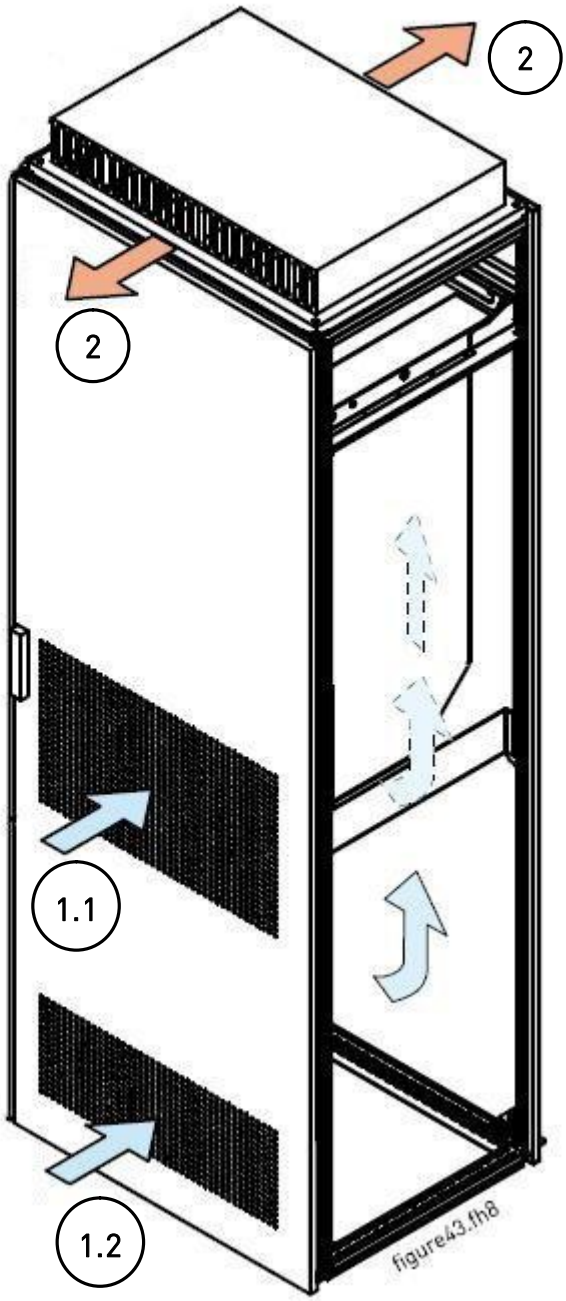

Figure 5-8. Cabinet openings for cooling.

1. Cooling air inlets
2. Hot air exhaust

5.2.4 Steering air flow

Cooling air must be taken in through the ventilation gaps on the door and blown out at the top of the enclosure. To steer the hot air from the power unit to the outlet at the top of the enclosure and prevent it from circulating back to the fan blower, use either of the following arrangements:

A. Install a closed air duct from the power unit to the outlet on top of the enclosure (A in figures below).

B. Install shields in the gaps between the power unit and the cabinet walls (B in figures below). Place the shields above the air outlet gaps at the sides of the module.

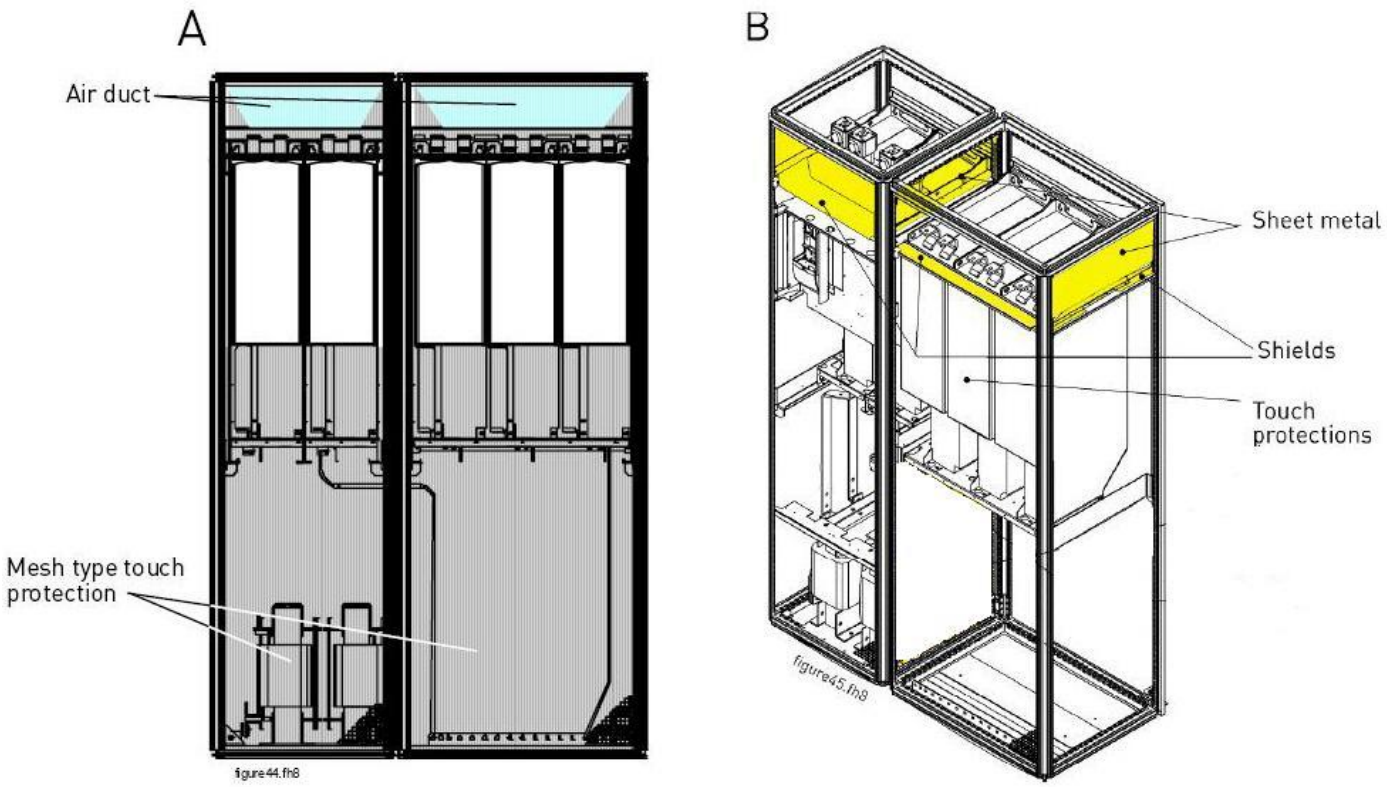

Figure 5-9. Cabinet cooling airflow guides.

The sheet metal airflow guides (deflectors) prevents air circulation between different sections of the equipment. The shield guides in prevent air circulation inside a section. The exhaust air holes must not be covered, nor must anything be placed above them to stop the free exit of warm air from inside the equipment. The cooling air intake holes must not be blocked in any way.

The materials used for preventing the circulation of air inside the equipment must be fire-restraining. The edges must be sealed to prevent the formation of gaps. When the deflectors are made according to the instructions, no separate cooling fan is required.

NOTE! The deflectors must be installed above the air intake holes on the top (in the front) of the unit.

NOTE! If a flat roof is used, mount a V-shaped air guide on the underside of the roof to direct the air flow horizontally. See Figure 5-10.

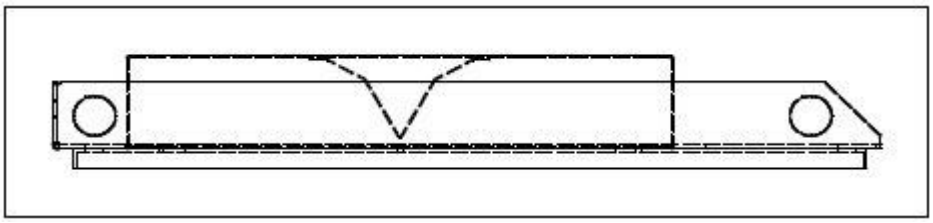

Figure 5-10. Roof structure seen from the side

5.3 Power connection

5.3.1 AC connection

The 3-phase input is connected to the input terminals of the AC choke (L1, L2 and L3), see Figure 5-12. Used input terminal are selected by supply voltage. The output terminals of the AC choke (L1, L2 and L3) are connected to the input terminals of the NFE unit (L1, L2 and L3), see Figure 5-11. The AC input of the NFE input group must be protected against short circuit. The fuses suitable for protection are shown in Section 4.9. A circuit breaker can also be used for protection, see Section 4.10. The best short-circuit protection is achieved by using fuses. The short-circuit protection must be on the input side when seen from the AC choke, Figure 4-2.

A cable or busbar designed for the purpose must be used to make the connection. The connection must be dimensioned according to the nominal current rating of the Non-Regenerative Front End. The necessary overloading allowance must also be used. The connection must also have the same short-circuit capacity as the whole system. The connecting cable or busbar may be of copper or aluminium. When aluminium is used, steps must be taken to prevent corrosion. The dimensions of the terminals in the unit are indicated in Appendix 7-6.

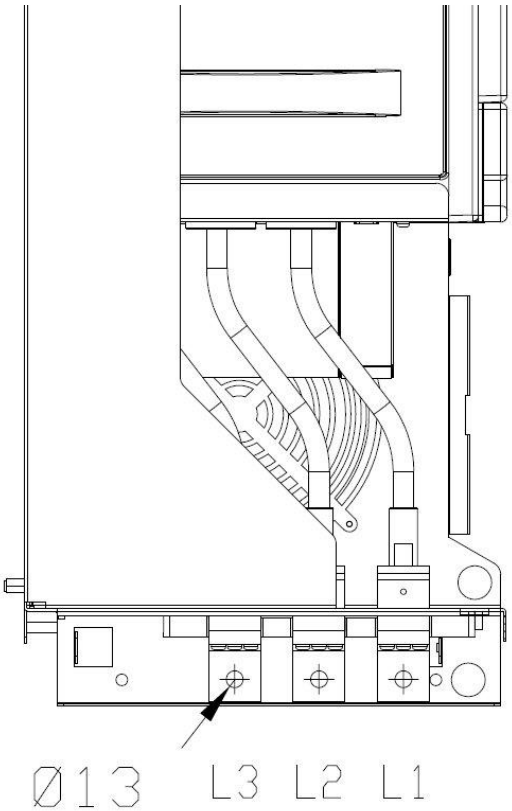

Figure 5-11. FI9 unit AC connection.

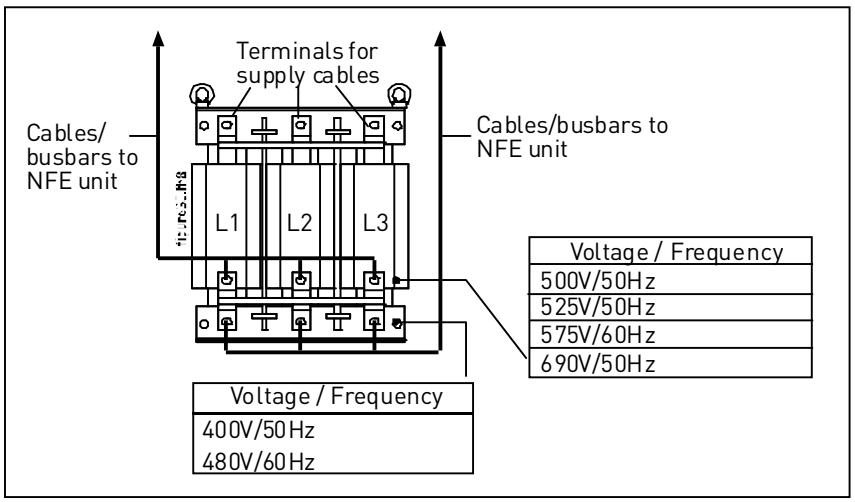

Figure 5-12. AC choke connections.

5.3.2 DC connection

The DC connection of the Non-Regenerative Front End unit is connected to the terminals at the top, see Figure 5-13. The terminals are marked as B+ for connection to DC+ and B- for connection to DC-. The DC connection must be protected using DC fuses, see Section 4.9. The terminal dimensions are shown in Appendix 7-6.

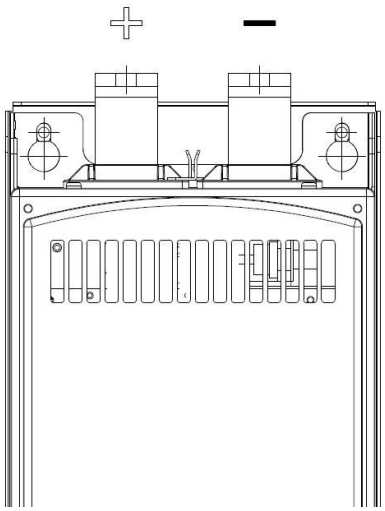

Figure 5-13. FI9 unit DC connection.

5.4 I/O terminals and I/O signals

I/O terminals can be found under the cover of Control box, see Figure 5-14 and 5-15. Descriptions of I/O signals see Figure 5-16.

NOTE! Digital signal out is open collector type.

Figure 5-14. Open the cover.

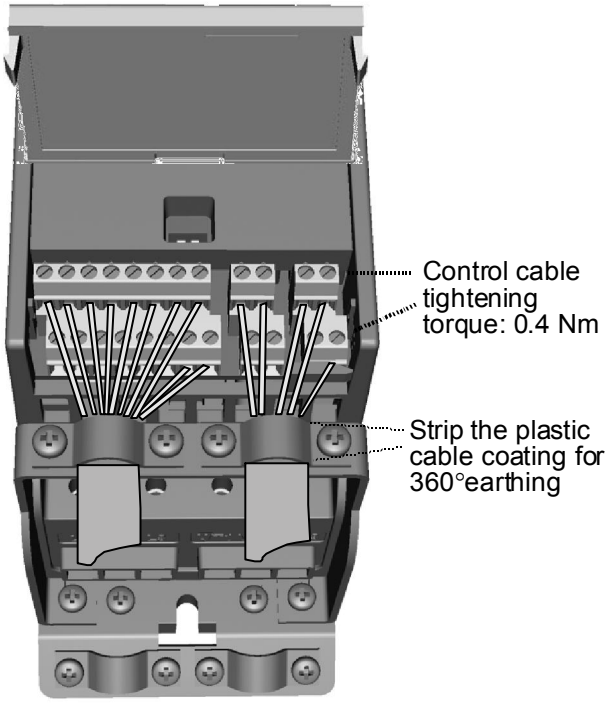

Figure 5-15. Cabling.

Terminal		Signal	Factory preset	Description
1	+10Vre	Ref. Voltage out		Not used
2	AI1	Analog signal in 1		Not used
3	GND	I/O signal ground		
6	24Vout	24V output fo DI's		
7	GND	I/O signal ground		
8	DI1	Digital input 1		0 = STOP 1 = START
9	DI2	Digital input 2		Not used
10	DI3	Digital input 3		1 = RESET
A	A	RS485 signal A		Not used
B	B	RS485 signal B		Not used
4	AI2	Analog signal in 2		Not used
5	GND	I/O signal ground		
13	GND	I/O signal ground		
14	DI4	Digital input 4		Not used
15	DI5	Digital input 5		Not used
16	DI6	Digital input 6		Not used
18	AO	Analog signal out		0 = Not used 1 = DC voltage 2 = Current
20	DO	Digital signal out		0 = Not used 1 = Ready 2 = Running 3 = Fault 4 = Fault inverted 5 = Warning
22	RO11	Relay out 1		0 = Not used 1 = Ready 2 = Running 3 = Fault 4 = Fault inverted 5 = Warning
23	RO12			
24	RO21	Relay out 2		0 = Not used 1 = Ready 2 = Running 3 = Fault 4 = Fault inverted 5 = Warning
25	RO22			
26	RO23			

Figure 5-16. I/O signals.

6. CONTROL KEYPAD

The control keypad is the link between Vacon NX Non-Regenerative Front End and the user. The control keypad features an alphanumeric display and indicators for the status (READY, RUN, STOP, ALARM, FAULT) and four indicators for the active menu (REF, MON, PAR, FLT). There are also three Status Indicator LED's (green – green – red).

The control information, i.e. the menu number, description of the menu or the displayed value and the numeric information are presented on three text lines.

The navigation wheel is used for navigating on the panel display. The wheel has two separate functions;

- rotating the wheel e.g. for changing parameter value (12 steps / round)
- pressing the wheel e.g. for accepting the new value.

6.1 Navigation

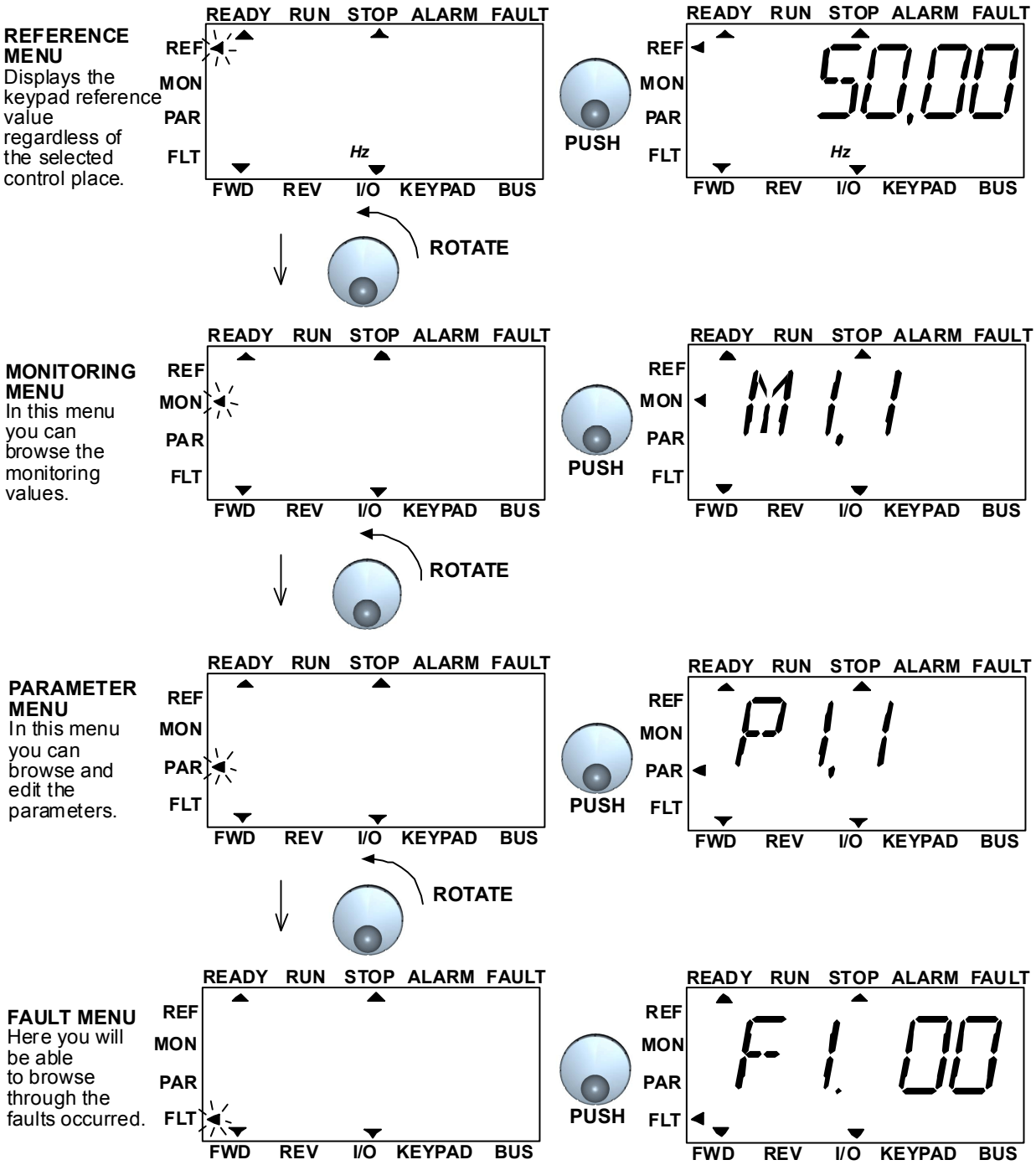

Figure 6-1. Navigation

6.1.1 Monitoring menu

Monitoring values mean actual values of measured signals as well as statuses of some control settings. Monitoring values are listed in Table 6-1.

Pushing the navigation wheel once in this menu takes the user to the next level, where the monitoring value, e.g. M1.1 and value is visible (see Figure 6-2). The monitoring values can be browsed by rolling the navigation wheel clockwise.

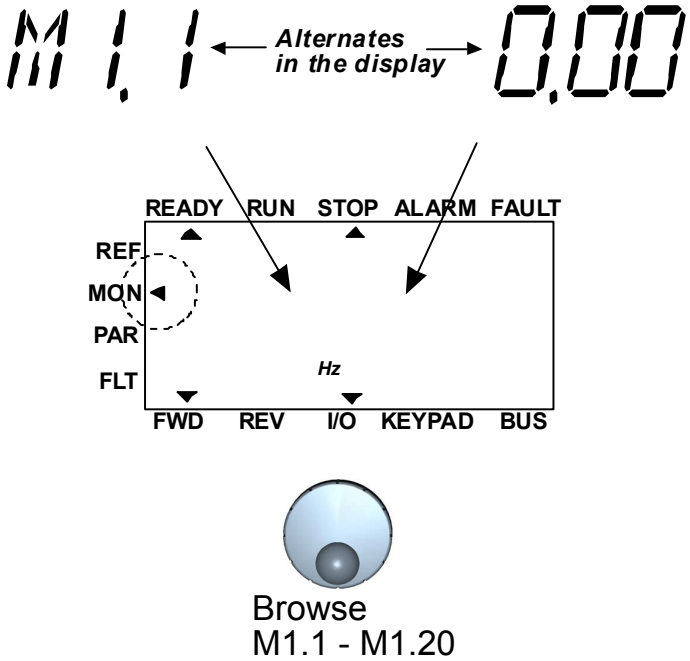

Figure 6-2. Monitoring menu

Code	Parameter	Scale	Unit	Description
M1.1	U_DCLINK	1	V	DC voltage
M1.2	IL1	1	A	Current of phase 1
M1.3	IL2	1	A	Current of phase 2
M1.4	IL3	1	A	Current of phase 3
M1.5	UL12	1	V	Voltage between phases L1-L2
M1.6	UL23	1	V	Voltage between phases L2-L3
M1.7	UL31	1	V	Voltage between phases L3-L1
M1.8	Isum	1	A	Total average AC current
M1.9	Temp	1	˚C	Unit Temperature

Table 6-1. Monitoring signals.

6.1.2 Parameter menu

In Parameter menu all settable parameters are visible. The parameters can be browsed by rolling the navigation wheel clockwise. Pushing the navigation wheel once in this menu takes the user to the next level, where the parameter value, e.g. P3.1 and value is visible (see Figure 6-3). Parameters are listed below.

The following figure shows the parameter menu view:

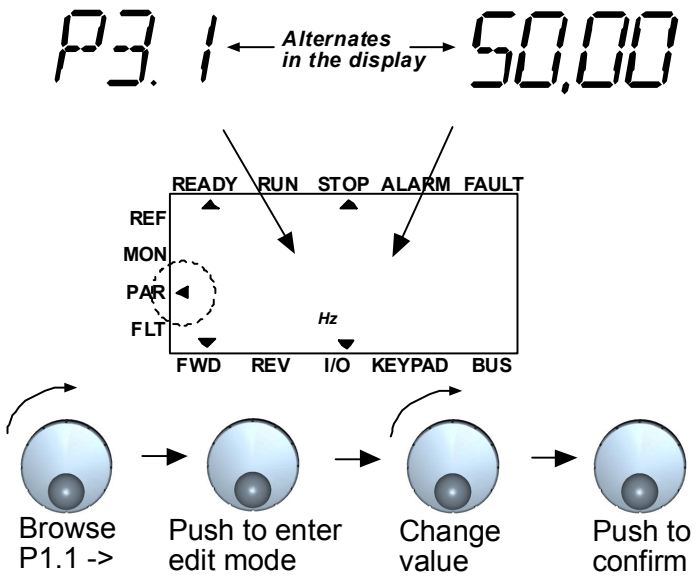

Figure 6-3. Parameter menu

Digital outputs

Code	Parameter	Min	Max	Default	Unit	Description
P1.1	Relay output 1	0	5	0		0 = Not used 1 = Ready 2 = Running 3 = Fault active 4 = Fault inverted 5 = Warning active
P1.2	Relay output 2	0	5	0		0 = Not used 1 = Ready 2 = Running 3 = Fault active 4 = Fault inverted 5 = Warning active
P1.3	Digital output 1	0	5	0		0 = Not used 1 = Ready 2 = Running 3 = Fault active 4 = Fault inverted 5 = Warning active

Analog outputs

Code	Parameter	Min	Max	Default	Unit	Description
P2.1	Analog output funtion	0	2	0		0 = Not used 1 = DC voltage 2 = Current
P2.2	Analog output minimum	0	1	0		0 = 0mA 1 = 4mA

P2.1 Analog output function

If the DC voltage is selected scaling is 0/4mA = 0VDC and 20mA = 1000VDC. If the current is selected scaling is 0/4mA = 0A and 20mA = 650A.

NFE parameters

Code	Parameter	Min	Max	Default	Unit	Description
P3.1	Load time limit	1	20	10	s	
P3.2	Over voltage limit	440	1300	1300	V	
P3.3	Over current limit	51	1014	780	A	

P3.1 Load time limit

If the pre-charging is longer than the level set by this parameter then loading time fault is triggered.

P3.2 Over voltage limit

If the DC link voltage is higher than the level set by this parameter then over voltage fault is triggered.

P3.3 Over current limit

If the input current is higher than the level set by this parameter then over current fault is triggered.

6.1.3 Fault history menu

In Fault history menu you can browse through 9 latest faults (see Figure 6-4). If a fault is active, the relevant fault number (e.g. F2) alternates in the display with main menu. When you browse between the faults, the fault codes of active faults are blinking. The active faults can be reset by pressing the STOP button for 1 second. If the fault cannot be reset, the blinking continues. It is possible to navigate in the menu structure also when there are active faults present, but the display returns automatically to the fault menu if buttons or navigation wheel are not pressed or navigation is not rotated. The operating hour, minute and second values at the fault instant are shown in the value menu (operating hours = displayed reading x 1000 h). Fault codes are listed in Table 6-2.

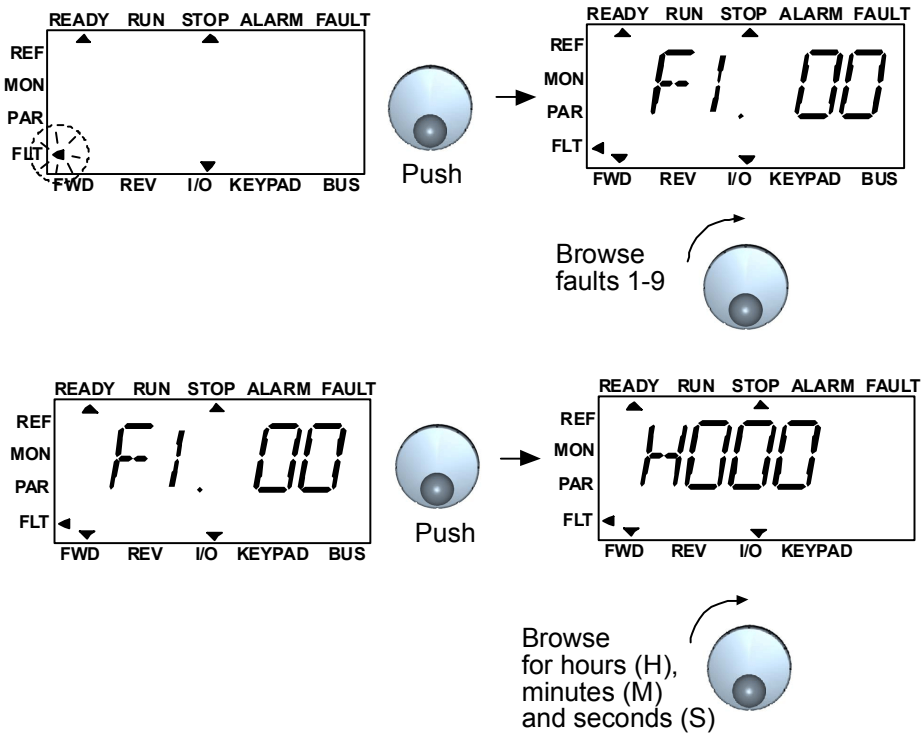

Figure 6-4. Fault history menu

Note! The whole fault history can be cleared by pressing STOP button for 5 sec time when the drive is stopped and fault history menu is selected in the display.

Note! If STOP button is pressed for 5 sec and no any menu is selected in the display factory reset is done. Factory reset set all parameters to default values !!

Fault	Description	Default limit value
F1	Over current	780 A
F2	Over voltage	1300 Vdc
F4	Loading time fault	10 s
F8	System Fault	
F9	Under voltage	(Supply voltage * 0,8*1,35)
F11	Input phase loss	
F13	Under temperature	<-10 / ˚C
F14	Over temperature	>80 / ˚C
F22	EEPROM fault	
F32	Fan/Inverter fault	
F99	Communication interrupted API/Power	

Table 6-2. Fault codes.

6.1.4 System menu

Code	Parameter	Description
S1.1	API SW ID	
S1.2	API SW Version	
S1.3	Power SW ID	
S1.4	Power SW Version	
S1.5	Application SW ID	
S1.6	Application SW Version)	
S1.7	CPU Load	

Table 6-3. System menu signals.

7. APPENDICES

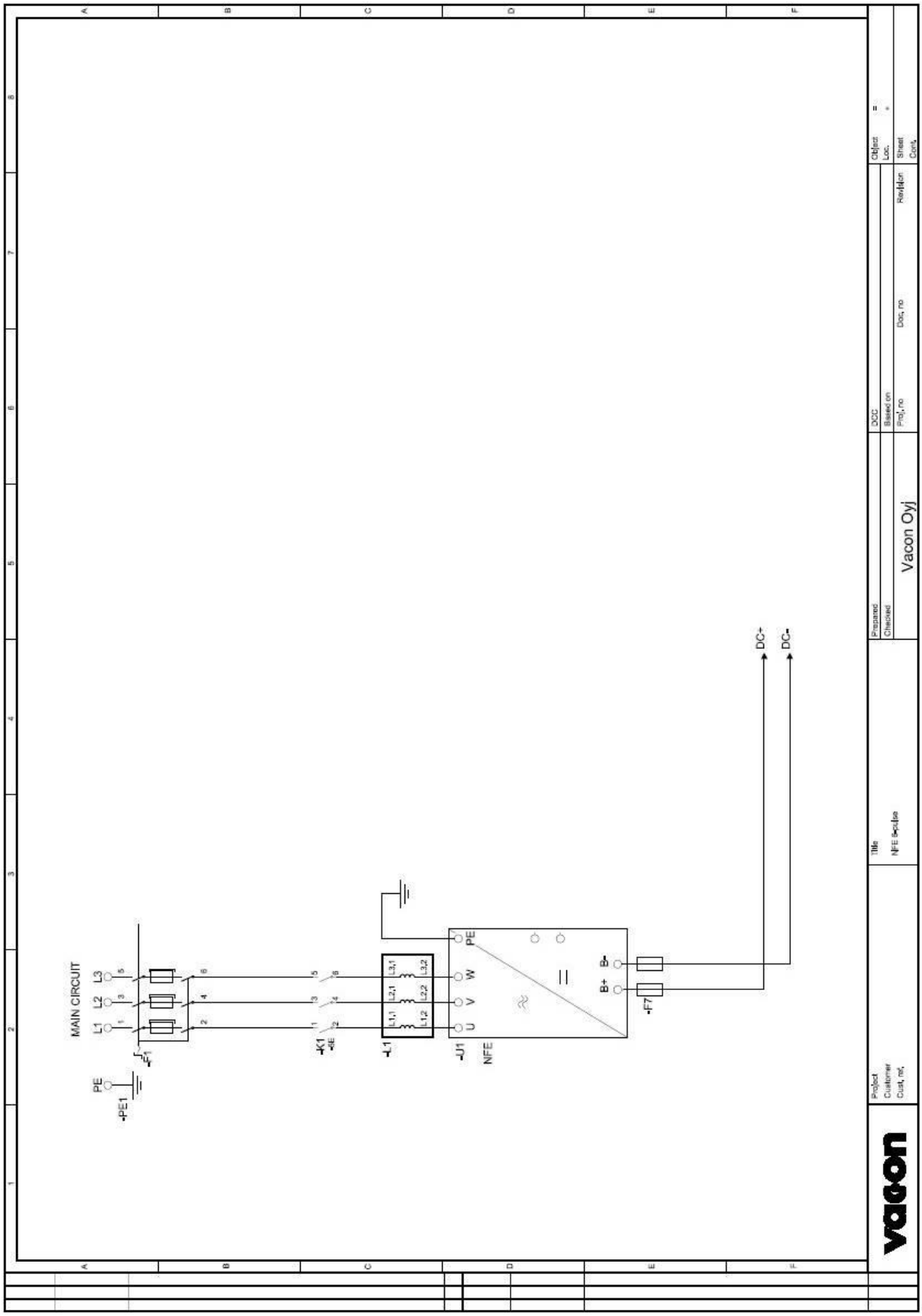

Appendix 7-1. Circuit diagram for NFE.

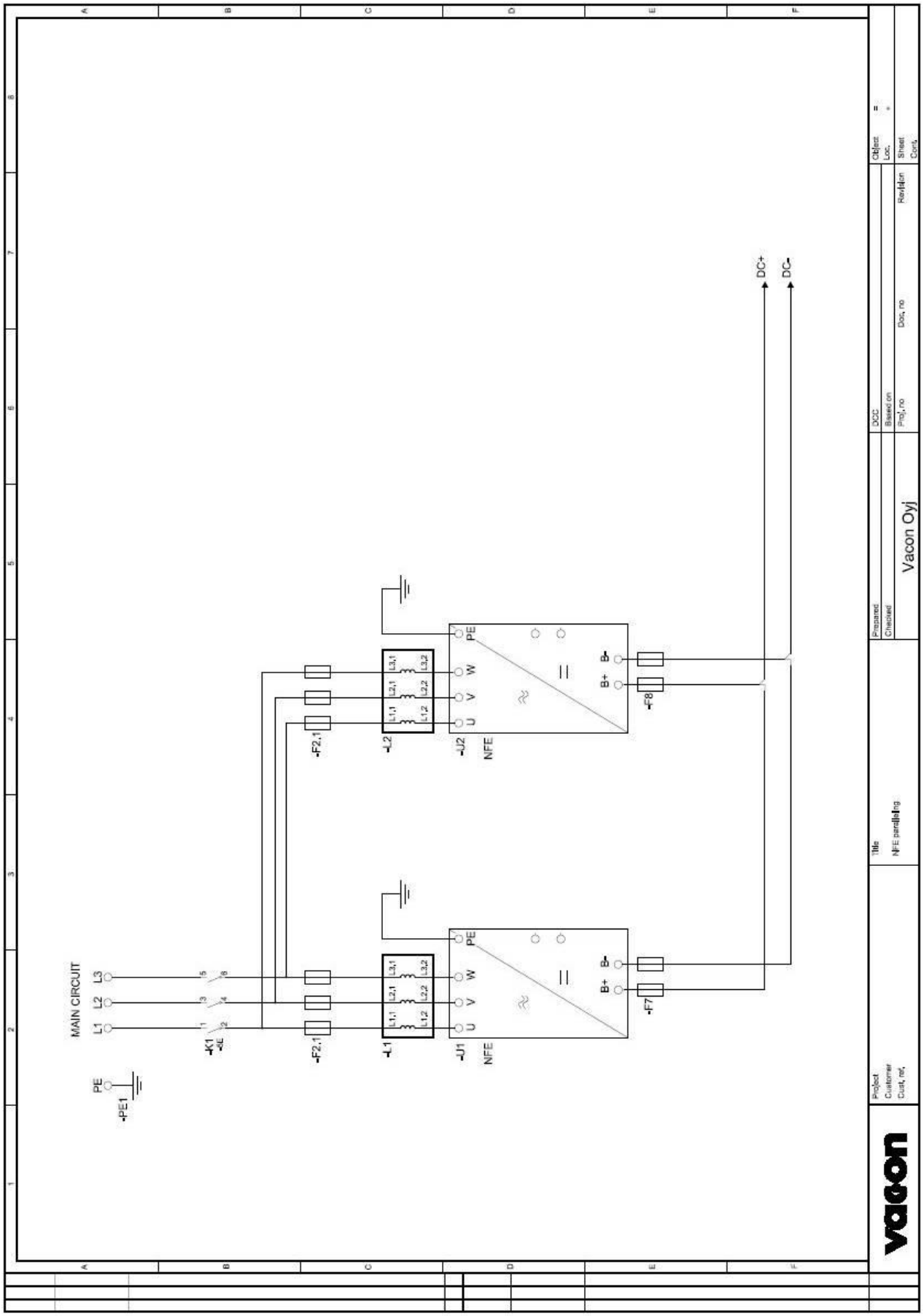

Appendix 7-2. Circuit diagram for parallel connected NFE.

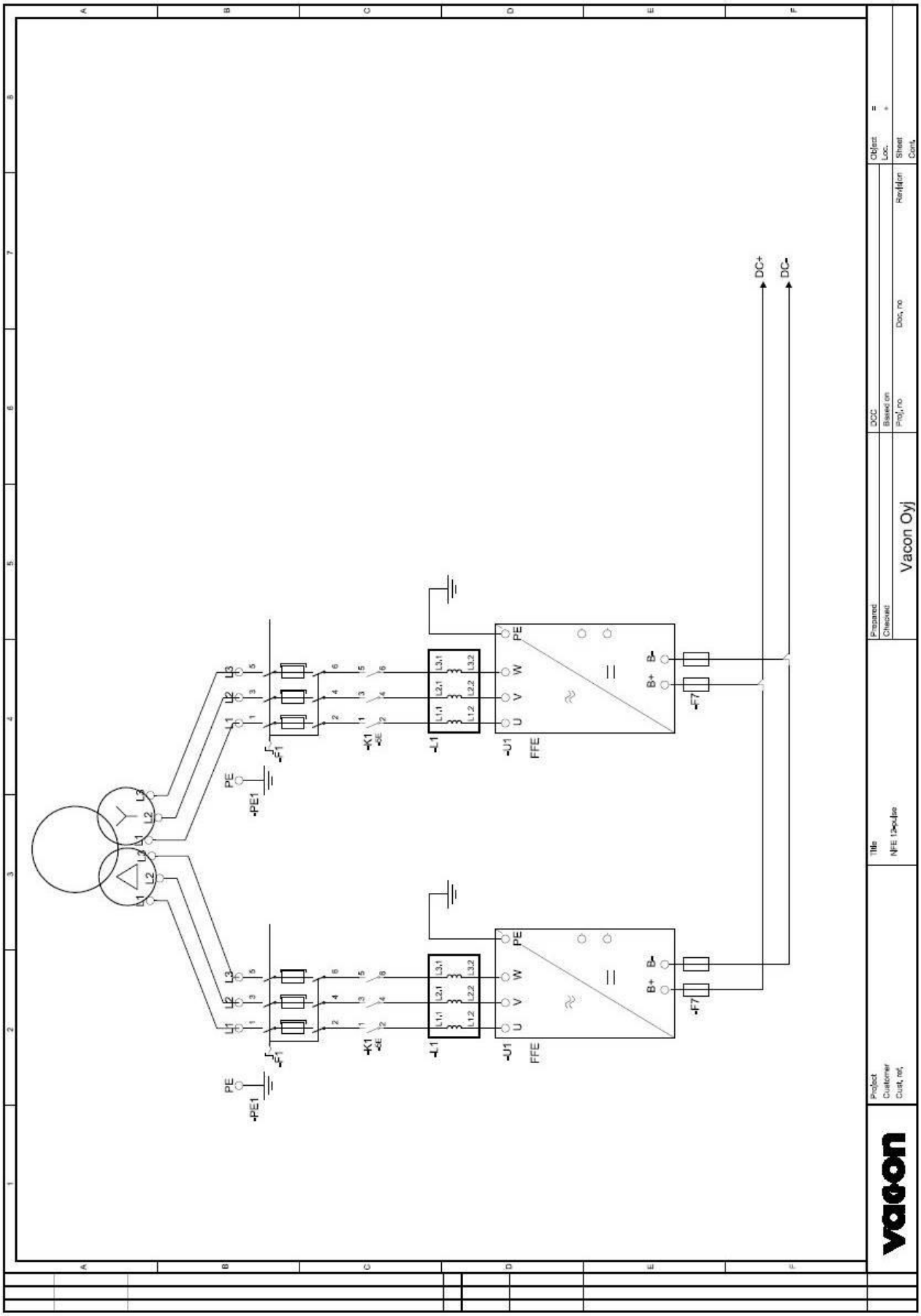

Appendix 7-3. Circuit diagram for 12- pulse solution with NFE.

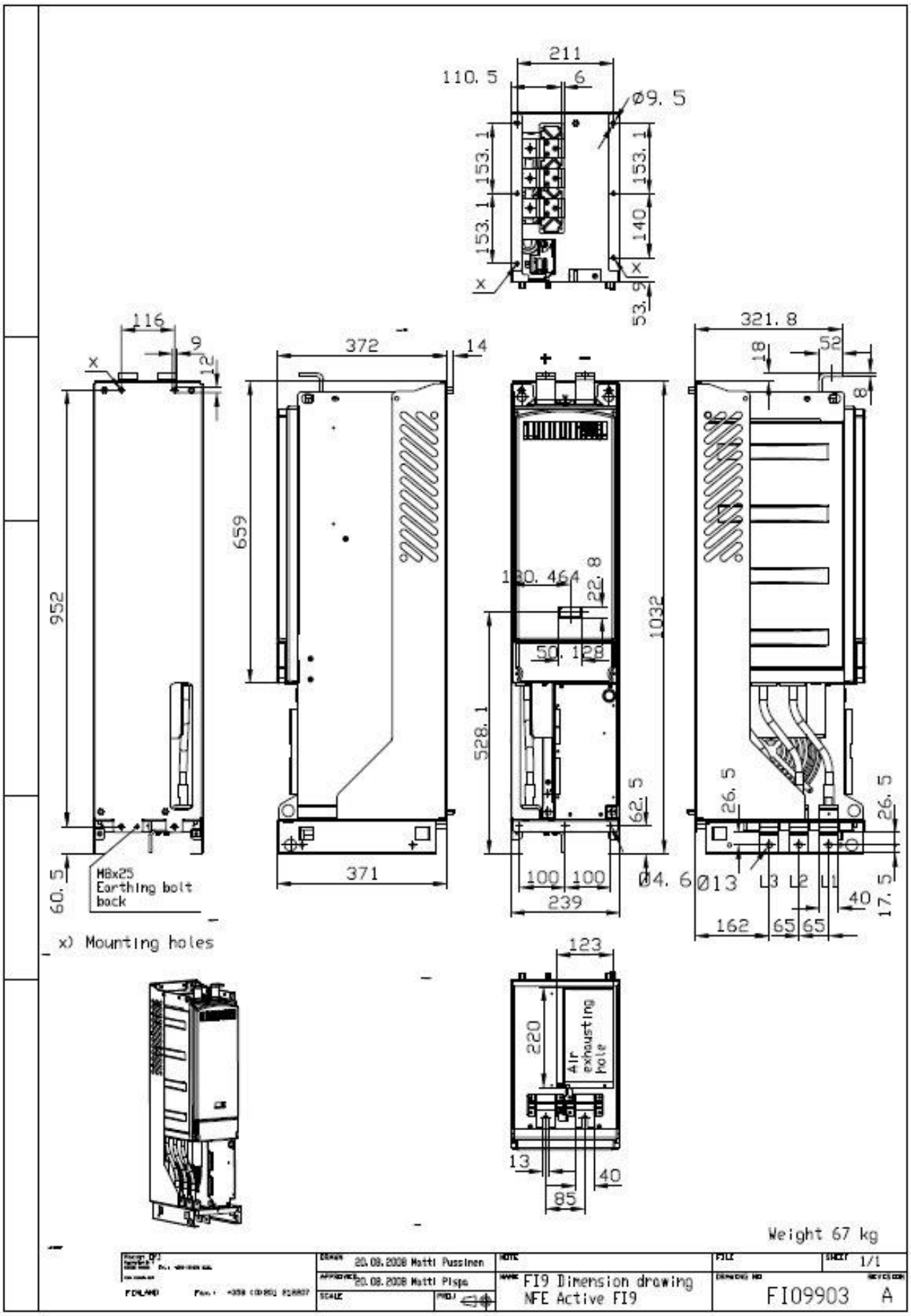

Appendix 7-4. FI9 Dimensions

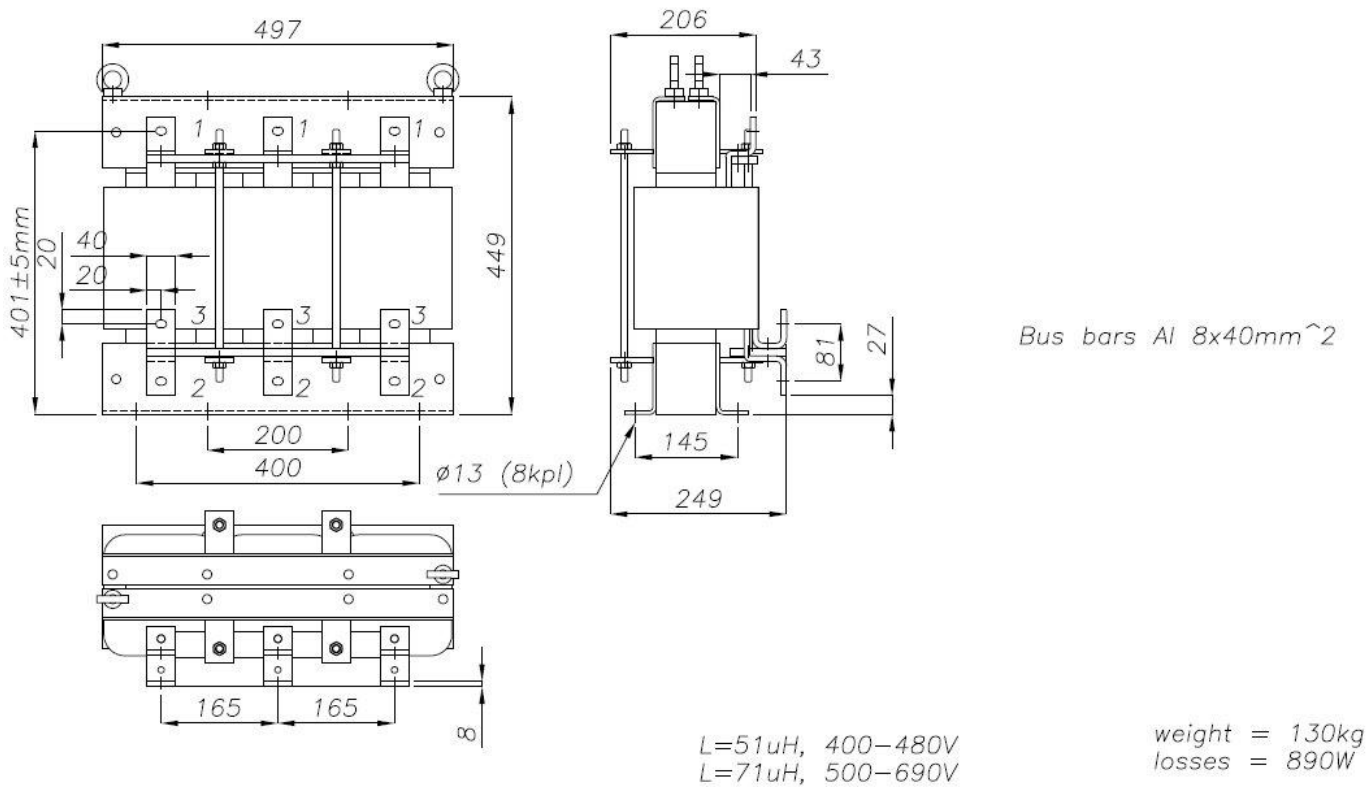

Appendix 7-5. AC choke dimensions

Frame	Type	IL [A]	DC terminal	AC Terminal
NXN_0650 6	FI9	650	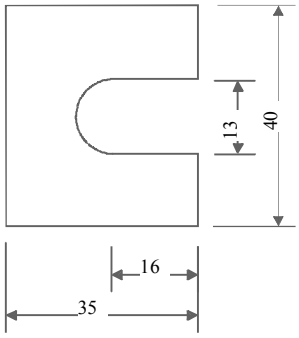 PE: M8×25	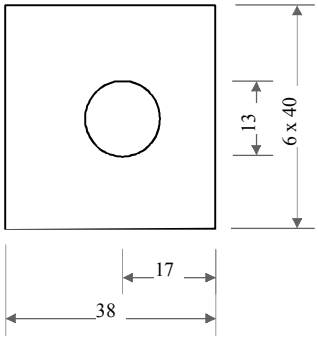

Appendix 7-6.Terminal sizes for Vacon NX Non-regenerative Front End unit.

VACON®

DRIVEN BY DRIVES

Find your nearest Vacon office
on the Internet at:

www.vacon.com

Manual authoring:
documentation@vacon.com

Vacon Plc.
Runsorintie 7
65380 Vaasa
Finland

Subject to change without prior notice
© 2012 Vacon Plc.

Document ID:
DPD01172
Rev. A